FULTON COUNTY

Vision

People *Families* *Neighborhoods*

Mission

To serve, protect and govern in concert with local municipalities

Values

People *Customer Services*
Ethics *Resource Management*
Innovation *Equal Opportunity*

PURCHASING DEPARTMENT
INVITATION TO BID NO. 05ITBR46700C-BL

2006 STANDBY MISCELLANEOUS CONSTRUCTION- WATER SYSTEM SERVICES CONTRACT

For
DEPARTMENT OF PUBLIC WORKS

BID DUE: December 21, 2005 at 11:00 a.m. Prevailing time in the Bid Conference Room in the Purchasing Department

PRE-BID MEETING:* December 8, 2005 at 2:00 p.m. *Prevailing time in the Bid Conference Room in the Purchasing Department

PURCHASING CONTACT: William Long at (404) 730-7660
E-MAIL: william.long@co.fulton.ga.us

LOCATION: FULTON COUNTY PURCHASING DEPARTMENT
130 PEACHTREE STREET, S.W., SUITE 1168 ATLANTA, GA 30303

GEORGIA UTILITY CONTRACTOR CERTIFICATION REQUIRED FOR BIDDING

TABLE OF CONTENTS:

2006 STANDBY CONSTRUCTION- MISCELLANEOUS WATER SYSTEM SERVICES

1.0 Invitation to Bid

1.1 Purpose 4
1.2 Description of Project 4
1.3 Term of Contract....4
1.4 Purchasing of Bid Documents 4
1.5 No Contact Provision....5
1.6 Bid Contact....5
1.7 Basis of Award....5
1.8 Pre-Bid Conference 6

2.0 Instruction to Bidders

2.1 Contract Documents....7
2.2 Definitions....7
2.3 Bidder's Modification and Withdrawal of Bids……..8
2.4 Addenda and Interpretations 8
2.5 Site Examination....8
2.6 Bid Required Submittals 9
2.7 Bid and Contract Security 10
2.8 Right to Reject Bids 11
2.9 Applicable Laws....11
2.10 Examination of Contract Documents 11
2.11 Termination....11
2.12 Indemnification and Hold Harmless Agreement 12
2.13 Bid Opening....12
2.14 Determination of Successful Bidder....12
2.15 Wage Clause 12
2.16 Notice of Award of Contract....12
2.17 Execution of Contract Documents 13
2.18 Joint Venture 14
2.19 Contractors Compliance with Procurement 14
2.20 Availability of Funding....14
2.21 Minimum Participation Requirement....14
2.22 Bid General Requirements 16

3.0 Purchasing Forms & Instructions

3.1.1 Form A - Non-Collusion Affidavit of Prime Bidder……22
3.1.2 Form B - Non-Collusion Affidavit of Sub-Contractors……..24
3.1.3 Form C - Certificate of Acceptance of Request for Bid Requirements……..26
3.1.4 Form D - Contractors License Certification……27
3.1.5 Form E - Certification Regarding Debarment……28
3.1.6 Form F - Corporate Certification……..…31
3.1.7 Form G - Non-Conflict of Interest Certification……..32
3.1.8 Form H - Certificate as to Corporate Principal……..33

4.0 Contract Compliance Requirements
Non-Discrimination in Contracting and Procurement
Required Forms and EBO Plan
Exhibit A – Promise of Non-Discrimination……..……36
Exhibit B – Employment Report…….37
Exhibit C – Schedule of Intended Subcontractor Utilization…….38
Exhibit D – Letter of Intent to Perform As a Subcontractor or Provide Materials or Services……..42
Exhibit E – Declaration Regarding Subcontracting Practices……..43
Exhibit F – Joint Venture Disclosure Affidavit……44
Exhibit G – Prime Contractor/Subcontractor Utilization Report…… 47

5.0 Insurance Information/Requirements……..49

6.0 Sample Contractual Agreement…….50

7.0 Bond Requirements
7.1.1 Bid Bond Requirements……..54
7.1.2 Performance Bond Requirements……57
7.1.3 Payment Bond Requirements……61

8.0 General Conditions……66

9.0 Special Conditions……90

10.0 Bid Form/ Pricing/ Bid Schedule……115

APPENDIX……..129

INVITATION TO BID

2006 Standby Construction- Miscellaneous Water system Services

SECTION 1 – Invitation to Bid

1.1 PURPOSE

The Fulton County Purchasing Department solicits Bids from qualified and experienced vendors to provide construction services for the 2006 Standby Construction-Miscellaneous Water System Services Contract. This contract is for installation and repairs to water mains and water services located through out Fulton County.

1.2 DESCRIPTION OF PROJECT

This work will consist of furnishing all materials, equipments and performing all labor necessary for the construction, installation, and emergency repair of miscellaneous water mains, water service lines, and required improvements to the water distribution system within Unincorporated Fulton County. The Work includes providing an emergency water main repair crew on an as needed basis. All work shall be in conformance with the contract documents, general conditions, special conditions, any accompanying plans and Fulton County Construction Standards and Specifications. Since this is a miscellaneous standby contract, the location of the work will be in various locations through out Fulton County. Projects will be assigned by issuance of a Notice to Proceed for that individual project.

1.3 TERM OF CONTRACT

The term of this Contract shall be 365 consecutive calendar days from the date of award by the Fulton County Board of Commissioners. The selected vendor(s) shall be issued work by a written/signed Notice to Proceed for individually assigned projects. Work shall begin no later than 10 days from the issuance of a Notice to Proceed. Fulton County reserves the right to renew this contract for one (1) additional 365 consecutive calendar day period pending availability of funding, contractor compliance with county rules and policies, satisfactory work performance by the contractor and Board of Commissioners approval. Option year prices shall be maintained at the rates approved in the initial contract term. Fulton County reserves the right to award this contract to one or more qualified vendors

1.4 PURCHASING OF BID DOCUMENTS

No Fee is associated with this ITB. This document and supporting documents can be downloaded at the Fulton County Website, http://www.co.fulton.ga.us/ under “Bid Opportunities”.

1.5 NO CONTACT PROVISION

It is the policy of Fulton County that the evaluation and award process for County contracts shall be free from both actual and perceived impropriety, and that contacts between potential vendors and County officials, elected officials and staff regarding pending awards of County contracts shall be prohibited.

A. No person, firm, or business entity, however situated or composed, obtaining a copy of or responding to this solicitation, shall initiate or continue any verbal or written communication regarding this solicitation with any County officer, elected official, employee, or designated County representative, between the date of the issuance of this solicitation and the date of the County Manager's recommendation to the Board of Commissioners for award of the subject contract, except as may otherwise be specifically authorized and permitted by the terms and conditions of this solicitation.

B. All verbal and written communications initiated by such person, firm, or entity regarding this solicitation, if same are authorized and permitted by the terms and conditions of this solicitation, shall be directed to the Purchasing Agent.

C. Any violation of this prohibition of the initiation or continuation of verbal or written communications with County officers, elected officials, employees, or designated County representatives shall result in a written finding by the Purchasing Agent that the submitted Bid or proposal of the person, firm, or entity in violation is "non-responsive", and same shall not be considered for award.

1.6 BID CONTACT

Information regarding the Bid, either procedural or technical, may be obtained by contacting **William E. Long, Jr**., at **(404) 730-7660,** Fulton County Department of Purchasing. Information regarding the Bid requirements may be obtained by using the following procedure. Inquiries must be submitted in writing to:

Fulton County Purchasing Department
Attn: William E. Long, Jr., Chief Assistant Purchasing Agent
130 Peachtree Street S.W., Suite 1168
Atlanta, GA 30303
Phone: (404) 730-7879
Fax: (404) 893-1745
Reference ITB#05ITB46700C-BL

1.7 BASIS OF AWARD

The Contract, if awarded, will be awarded to the lowest responsive and responsible bidder(s). Fulton County reserves the right to award in whole or in part to one or more vendors. Work will be assigned by a written Notice to Proceed and payment shall be based on the actual work performed and unit prices submitted in the Bid Schedule. No bid may be withdrawn for a period of Ninety (90) days after the date of bid opening

except as permitted by O.C.G.A., §36-91-41 et seq., as amended. Each Bid must be accompanied by a Bid Bond in accordance with the Bid Bond Requirements provided in the Contract Documents, on a Surety Company's Standard Bid Bond Form acceptable to the County in an amount no less than 5% of the amount bid. The successful bidder will be required to furnish a Performance Bond and Payment Bond, **on or before** the issuance of Notice to Proceed, each in the amount of 100% of the Contract Amount. All other required Contract Documents must be fully completed and executed by the Contractor and his/her Surety, and submitted to the Owner **on or before** the issuance of the Notice to Proceed.

1.8 PRE-BID CONFERENCE

Date:	**Thursday, September 22, 2005**
Time:	**2:00 P.M., Local Time**
Location:	**Fulton County Purchasing Department Bid Room** **Public Safety Building** **130 Peachtree St., S.W. Suite 1168** **Atlanta, Georgia, 30303**

A non-mandatory pre-Bid conference will be held in the Fulton County Purchasing Department Conference Room, located at 130 Peachtree St., SW, Suite 1168, Atlanta, Georgia, 30303. ***Inquiries regarding this solicitation, either technical or otherwise must be submitted in writing.*** Any questions and responses provided will not be the official responses from Fulton County. To receive Fulton County's official responses to questions, questions must be submitted in written form to Fulton County by the deadline date established in this Invitation to Bid. Fulton County will provide its official response to questions in the form of an addendum that will be posted to Fulton County's website.

The pre-Bid conference will be conducted for the purpose of explaining the County's bid process, the specification/technical documents, and to provide an initial verbal, non-binding verbal response to questions concerning these Bid specifications and to discuss issues from the Bidder's perspective. However, no verbal response provided at the pre-Bid conference binds the County.

SECTION 2 - INSTRUCTIONS TO BIDDERS

2.1 Contract Documents

The Contract Documents include the Invitation to Bid, Instructions to Bidders, Contractor's Bid (including all documentation accompanying the Bid and any post-Bid documentation required by the County prior to the Notice of Award), Bonds, all Special Conditions, General Conditions, Bid Forms, Supplementary Conditions, Fulton County Construction Standards and Specifications, Drawings, Addenda, Exhibits, Purchasing Forms, Contract Compliance Forms and any Change Orders. Shop drawing submittals reviewed in accordance with the General Conditions, geotechnical investigations and soils report and drawings of physical conditions in or relating to existing surface structures at or contiguous to the site are not Contract Documents. The Contract Documents shall define and describe the complete work to which they relate.

2.2 Definitions: Where the following words or the pronouns used in their stead occur herein, they shall have the following meaning. If a conflict exists as to the meaning of a word, the definition existing in the General Conditions, if present, shall govern.

Construction Manager - The Construction Manager is the person or entity identified as such in writing by the County. The Construction Manager may be a County employee or entity retained by the County for purposes of administering this contract. The term “Construction Manager” means the Construction Manager or the Construction Manager’s authorized representative. The Construction Manager is the County’s agent for purposes of administering this contract.

Contract Price - The sum specified in the Agreement to be paid to the Contractor in consideration of the Work.

County - FULTON County, Georgia, a political subdivision of the State of Georgia, acting by and through the Chairman of its Board of Commissioners.

Day - A calendar day of twenty-four hours lasting from midnight of one day to midnight the next day.

Director - Director of the Department of Public Works of FULTON County, Georgia or the designee thereof.

Engineer – Shall be the Director of Public Works or his duly authorized representative.

Notice to Proceed - A written communication issued by the County to the Contractor authorizing it to proceed with the work, establishing the date of commencement and completion of the work, and providing other direction to the Contractor.

Project Manual - The Contract Documents

Substantial Completion - The date certified by the Construction Manager when all or a part of the work, as established pursuant to General Condition 0500-81, is sufficiently completed in accordance with the requirements of the contract documents so that the identified portion of the work can be utilized for the purposes for which it is intended.

Work - All of the services specified, indicated, shown or contemplated by the contract documents, and furnishing by the Contractor of all materials, equipment, labor, methods, processes, construction and manufacturing materials and equipment, tools, plans, supplies, power, water, transportation and other things necessary to complete such services in accordance with the contract documents to insure a functional and complete facility.

2.3 Bidder's Modification and Withdrawal of Bids: A Bidder may modify or withdraw its bid by written request, provided that the request is received by the County prior to the bid due date and time at the address to which bids are to be submitted. Provided further, that in case of an electronic request (i.e. facsimile, e-mail, etc.) a written confirmation thereof over the authorized signature of the Bidder must be received by the County at the address to which original Bids are to be submitted within three (3) calendar days after issue of the electronic message. Following withdrawal of its bid, the Bidder may submit a new, providing delivery is affected prior to the established bid opening date and time. **No bid may be withdrawn after bid due date for sixty (90) calendar days.**

2.4 Addenda and Interpretations: No interpretations of the meaning of the Drawings, Specifications or other Bid documents will be made to any Bidder orally. Bidders requiring clarification or interpretation of the Bidding Documents shall make a request to **William E. Long, Jr., Chief Assistant Purchasing Agent** no later than **5:00 PM, September 27, 2005**. Written requests for clarification or interpretation may be mailed, hand delivered, e-mailed or faxed to the Assistant Purchasing Agent at the address below, e-mail address or fax number. Telephone inquiries will not be accepted.

[INSERT NAME], Assistant Purchasing Agent
Department of Purchasing
Fulton County Public Safety Building
130 Peachtree Street, S.W., 1168
Atlanta, GA 30303
Fax: (404) 893-6268
William.long@co.fulton.ga.us

Only communications from firms that are in writing and signed will be recognized by the County as duly authorized expressions on behalf of proposers/bidders. Any and all such interpretations and any supplemental instructions will be in the form of written Addenda to the Specifications which, and if any addenda are issued to this Invitation to Bid.

2.5 Site Examination: There will be no site visit for this project. The work will be assigned at various locations throughout Fulton County.

Bid: All Bids must be made on the Bid forms contained herein. The Bid shall be enclosed in a sealed envelope, addressed to Department of Purchasing, Fulton County Public Safety Building, 130 Peachtree Street, S.W., Suite 1168 Atlanta, Georgia 30303 and labeled "Bid for ITB**-05ITB46700C-BL, 2006 Standby Miscellaneous Construction-Water System Services Contract.** ***THE BIDDER IS ALSO REQUIRED TO DISPLAY THEIR GEORGIA UTILITY CONTRACTOR LICENSE NUMBER ON THE OUTSIDE OF***

THE SEALED BID ENVELOPE. The Utility Contractors license (For all contractors engaged in Utility Contracting – Utility Contracting is defined as the undertaking to construct, erect, alter or repair or to have constructed, erected, altered, or repaired any utility system in which the cost of the utility system work exceeds one hundred thousand dollars - $100,000) number is also required to be clearly printed on the Proposers/Bidders Envelope.

2.6 REQUIRED SUBMITTALS: The bidder **must complete and execute** the following:

1. Bid Form
2. Bid Schedule
3. Bid Bond
4. Certification of Acceptance of Bid/Proposal Requirements
5. Corporate or Partnership Certificate
6. Non-Collusion Affidavit of Prime Bidder
7. Non-Collusion Affidavit of Subcontractor
8. Contract Compliance Forms, fully executed
   a. Promise of Non-Discrimination (Exhibit A)
   b. Employment Report (Exhibit B)
   c. Schedule of Intended Subcontractor Utilization (Exhibit C)
   d. Letter of Intent to Perform As a Subcontractor or Provide Materials or Services (Exhibit D)
   e. Declaration Regarding subcontractor Practices (Exhibit E)
   f. Joint Venture Disclosure Affidavit (Exhibit F)
   g. Equal Business Opportunity (EBO) Plan

Any bids received after the stated time and date shall not be considered. It shall be the sole responsibility of the bidder to have his/her bid delivered to the Fulton County Department of Purchasing for receipt on or before the stated time and date (section 00020). If a bid is sent by U.S. Mail, the bidder shall be responsible for its timely delivery to the Purchasing Department. Bids delayed by mail will not be considered, shall not be opened, and arrangements shall be made for their return at the bidder's request and expense.

One originally signed bid, with two (2) copies shall be submitted in a sealed package, clearly marked on the outside.

Additionally, Bidder is to write their Utility Contractor License Number on the outside of the sealed package containing the bid. Failure to put the Utility Contractor License number on the package will result in the bid being determined to be non-responsive.

Bid shall be publicly opened, with only the names and total bid price of the bidders disclosed at the opening.

2.7 Bid and Contract Security: A Bid Bond for an amount equal to five percent (5%) of the bid amount must accompany each Proposal. The bid bond shall be submitted in a separate, sealed envelope marked "Bid Bond".

Bids must be accompanied by a bid bond or certified check in an amount of five percent (5%) of the TOTAL AMOUNT of the base bid. The bid bond or certified check shall apply ONLY TO THIS BID. The bid name and contract number must appear on the security instrument. The bond must remain in full force and effect until the Bidder executes the final Contract. Bids not satisfying the bonding requirements of this project will be declared non-responsive.

Any bid bond, performance bond, payment bond, or security deposit required for public works construction contract shall be approved and filed with purchasing agent. At the option of the County, if the surety named in the bond is other than a surety company authorized by law to do business in this state pursuant to a current certificate of authority to transact surety business by the Commissioner of Insurance, such bond shall not be approved and filed unless such surety is on the United States Department of Treasury's list of approved bond sureties.

A Purchasing Agent shall approve as to form and as to the solvency of the surety any bid bond, performance bond, or payment bond required by this. In the case of a bid bond, such approval shall be obtained prior to acceptance of the bid or proposal. In the case of payment bonds and performance bonds, such approval shall be obtained prior to the execution of the contract.

Whenever, in the judgment of the County:
(1) Any surety on a bid, performance, or payment bond has become insolvent;
(2) Any corporation surety is not longer certified or approved by the Commissioner of Insurance to do business in the state; or
(3) For any cause there are no longer proper or sufficient sureties on any or all the bonds

The County may require the contractor to strengthen any or all of the bonds or to furnish a new or additional bond or bonds within ten days. Thereupon, if so ordered by the County, all work on the contract shall cease unless such new or additional bond or bonds are furnished. If such bond or bonds are not furnished within such time, the County may terminate the contract and complete the same as the agent of and at the expense of the contractor and his or her sureties.

As a condition of responsiveness the bidder must contain a Bid Bond for an amount equal to 5% of the bid amount. The Bid Bond shall be included in a separate envelope marked on the outside "Bid Bond". Checks or letters of credit of any type will not be accepted. A certified cashier's check will be acceptable. Provide a completed and fully executed Bid Bond. When the bidder's package is opened, a purchasing agent will verify the presence of the Bid Bond and remove it from the Proposal Package.

If the bidder withdraws its bid from the competition after the selection of its bid for a reason not authorized by Georgia law, the County will proceed on the Bid Bond, along with any other available remedies.

The Surety of the Bid Bond shall be from a surety company authorized to do business in the State of Georgia, shall be listed in the Department of Treasury Circular 570, and shall have an underwriting limitation in excess of 100% of the bid amount. The Bonds and Surety shall be subject to approval by the County Attorney.

Attorneys-in-fact for bidders who sign bid bonds or contract bonds must file with each bond a certified and effectively dated copy of their power of attorney.

2.8 Right to Reject Bids: The County reserves the right to reject any or all bids and to waive informalities. No bids will be received after the time set for opening bids. Any unauthorized conditions, limitations or provisions attached to the Bid, except as provided herein, will render it informal and may cause its rejection. Unbalanced bids will be subject to rejection. Any bidder may withdraw his/her bid, either personally or by telegraphic or written request, at any time prior to the scheduled closing time for receipt of bids. Telegraphic or written requests for withdrawal must be in the possession of the County prior to the closing time for receipt of bids.

2.9 Applicable Laws: All applicable laws and regulations of the State of Georgia and ordinances and regulations of Fulton County shall apply. Protestors shall seek resolution of their complaints in the manner provided in the Fulton County Code of Laws §2-324, which is incorporated by reference herein.

2.10 Examination of Contract Documents: Prospective bidders shall examine the contract documents and before submitting a bid, shall make a written request to the County for an interpretation or correction of any ambiguity, in consistency or error therein which could be discovered by a bidder. At the bid opening each bidder shall be presumed to have read and be familiar with the contract documents.

2.11 Termination: The County may terminate the contract resulting from this solicitation at any time the vendor fails to carry out the contract provisions, if in the opinion of the County, the performance of the contract is unreasonably delayed, or the vendor is in direct violation of the contract conditions. The County shall provide the vendor with notice of any conditions which violate or endanger the performance of the contract and, if after such notice the contractor fails to remedy such conditions within thirty (30) days, to the satisfaction of the County, the County may exercise their option in writing to terminate the Contract without further notice to the Contractor and order the Contractor

to stop work immediately and vacate the premises. Vendor agrees by its bid submission that the County's decision is final and valid.

2.12 Indemnification and Hold Harmless Agreement: The successful contractor will agree to indemnify, save harmless and defend the County, its agents, servants, and employees from all lawsuits, claims, demands, liabilities, losses and expenses for or on account of any injury or loss in connection with the work performed under this contract: Provided, however the Contractor shall not be liable for any damages resulting for the sole negligent or intentional acts or omission of the County and its employees, agents or representatives.

2.13 Bid Opening: Bids will be opened, **October 5, 2005 at 11:00 am, local time** in public and read aloud. All bidders are requested to be present at the opening.

2.14 Determination of Successful Bidder: Fulton County desires to complete this work in a timely manner. The Contract will be awarded to the lowest responsive, responsible bidder(s), if awarded.

1) **Responsibility*:*** The determination of the bidder's responsibility will be made by the County based on whether the bidder meets the following minimum requirements:

   a) The County reserves the right to reject any bid if the evidence submitted by, or investigation of, the bidder fails to satisfy the County that he/she is properly qualified to carry out the obligations of the Contract.
   b) Is properly licensed to perform this type of work in Fulton County. Bidders must have a utility contractors license to perform this work. O.C.G.A. §43-14-8.3 (h)
   c) Maintains a permanent place of business individually or in conjunction with the prime contractor.
   d) Has the appropriate and adequate technical experience. Designated Project Manager must be proficient in all aspects of contracted work.
   e) Has adequate personnel and equipment to do the work expeditiously.
   f) Has suitable financial means to meet obligations incidental to the work.

2) **Responsiveness:** The determination of responsiveness will be made by the County based on a consideration of whether the bidder has submitted a complete Bid form without irregularities, excisions, special conditions, or alternative bids for any item unless specifically requested in the Bid form. Loaded or unbalanced bids shall be deemed non responsive and will not be excepted.

2.15 Wage Clause: Pursuant to 102-391, Each Contractor shall agree that in the performance of the Contract he will comply with all lawful agreements, if any, which the Contractor had made with any association, union, or other entity, with respect to wages, salaries, and working conditions, so as not to cause inconvenience, picketing, or work stoppage.

2.16 Notice of Award of Contract: As soon as possible, and within sixty (60) days after receipt of bids, the County shall notify the successful Bidder of the Award of Contract.

The award shall be made by the Board of Commissioners of Fulton County to the lowest responsive, responsible bidder(s) as soon as possible after receipt of bids, taking into consideration price and the responsiveness to the requirements set forth in the Invitation for Bid. In such case, no claim shall be made by the selected Contractor(s) for loss of profit if the contract is not awarded or awarded for less work than is indicated and for less than the amount of his bid. The total of the awarded contract shall not exceed the available funds allocated for this project.

Should the County require additional time to award the contract, the time may be extended by mutual agreement between the County and the successful bidder. If an Award of Contract has not been made within sixty (60) days from the bid date or within the extension mutually agreed upon, the Bidder may withdraw the Bid without further liability on the part of either party.

The term of this Contract shall be 365 consecutive calendar days from the date of award by the Fulton County Board of Commissioners. The selected vendor(s) shall be issued work by a written/signed Notice to Proceed for individually assigned projects. Work shall begin no later than 10 days from the issuance of a Notice to Proceed. Fulton County reserves the right to renew this contract for one (1) additional 365 consecutive calendar day period pending availability of funding, contractor compliance with county rules and policies, satisfactory work performance by the contractor and Board of Commissioners approval. Option year prices shall be maintained at the rates approved in the initial contract term. Fulton County reserves the right to award this contract to one or more qualified vendors

Any award made by the Board of Commissioners as a result of this bid will begin from the date of award by the Board of Commissioners. The Bidder agrees hereby to commence work under this Contract, with adequate personnel and equipment, on a date to be specified in a written order of the Program Manager. The contract shall become effective on the Contract Date and shall continue in effect until the end of the term of the contract or until the project has been closed-out by the Program Manager unless earlier terminated pursuant to the termination provisions of the contract.

2.17 Execution of Contract Documents: Upon notification of Award of Contract, the County shall furnish the Contractor the conformed copies of Contract Documents for execution by the Contractor and Contractor's surety.

Within fifteen (15) days after receipt the Contractor shall return all the documents properly executed by the Contractor and the Contractor's surety. Attached to each document shall be an original power-of-attorney for the person executing the bonds for the surety and certificates of insurance for the required insurance coverage.

After receipt of the documents executed by the Contractor and his surety with the power-of-attorney and certificates of insurance, the County shall complete the execution of the

documents. Distribution of the completed documents will be made upon completion.

Should the contractor and/or surety fail to execute the documents within the time specified, the County shall have the right to proceed on the Bid Bond accompanying the bid.

If the County fails to execute the documents within the time limit specified, the Contractor shall have the right to withdraw the Contractor's bid without penalty.

Should an extension of any of the time limits stated above be required, this shall be done only by mutual agreement between both parties.

Any agreement or contract resulting from the acceptance of a bid shall be on a County approved document form. The County reserves the right to reject any agreement that does not conform to the Invitation for Bid and any County requirements for agreements and contracts. The County reserves the right to modify the agreement resulting from this bid upon the recommendation of the County Attorney.

2.18 Joint Venture Any Bidder intending to respond to this solicitation as a joint venture must submit an executed joint venture agreement with its offer. The agreement must designate those persons or entities authorized to execute documents or otherwise bind the joint venture in all transactions with Fulton County, or be accompanied by a document, binding upon the joint venture and its constituent members, making such designation. Offers from joint ventures that do not include these documents will be rejected as being non-responsive.

2.19 Contractors Compliance With All Assurances And/Or Promises Made In Response To Procurement: Should any Bidder submit a response to the County promising to provide a certain level of service for either the scope of work, MFBE participation, or any other matter, including where such promise or assurance is greater than what is required by the procurement documents, and should this response containing the promise or assurance be accepted by the County and made a part of the Contract Documents, then this degree or level of service promised by the bidder relating to the scope of work, MFBE participation, or other matter shall be considered to be a material part of the Agreement between the bidder and the County, such that the bidder's failure to provide the agreed upon degree or level of service or participation shall be a material breach of the Agreement giving the County just cause to terminate the Agreement for cause, pursuant to the General Conditions of the Agreement.

2.20 Availability Of Funding: Any award of work, contract, or service for any portion of the 2006 Standby Construction- Miscellaneous Water System Services Contract will be conditional and subject to Fulton County obtaining financing through the issuance of water and sewer revenue bonds where the proceeds from such bonds are in an amount sufficient to fund the 2006 Standby Construction- Miscellaneous Water System Services Contract. This conditional award will not be in effect until Fulton County has been successful in raising the required funds for payment of the 2006 Standby Construction- Miscellaneous Water System Services Contract. If it proves impossible for Fulton County to raise the required funds, the conditional award will be

cancelled by Fulton County without any recourse by the responding entity. The submittal of a bid in response to any phase of the procurement for the 2006 Standby Construction- Miscellaneous Water System Services Contract serves as acceptance of this condition by the entity responding to the procurement. Without waiving any of the conditions contained herein, and solely for informational purposes, please be aware that the Fulton County Board of Commissioners has taken legislative action authorizing the Fulton County Director of Finance to procure the services of the various professionals that will assist in obtaining the bond proceeds, and it is anticipated that the funding will be in place by the second or third quarter of 2005.

2.21 MINIMUM PARTICIPATION REQUIREMENTS FOR PRIME CONTRACTORS

Pursuant to Fulton County Code 102-357, Prime Bidders on the project must perform no less than 51% of the scope of work required under the project.

2.22

BID GENERAL REQUIREMENTS
FULTON COUNTY PURCHASING DEPARTMENT

2006 STANDBY CONSTRUCTION- MISCELLANEOUS WATER SYSTEM SERVICES

The following information pertains to the submission of a Bid to Fulton County, and contains instructions on how Bids must be presented in order to be considered. Listed below are the requirements for all Bidders interested in doing business with Fulton County.

1. The Bid sheets included in this Invitation to Bid ("Bid") must be fully completed and returned with the Bid unless otherwise specified in writing by the Purchasing Department. Type or neatly print the date, company name, and the full legal name and title of the person(s) signing the Bid in the place provided at the bottom of each Bid sheet. Any additional sheets submitted must contain the same signature and Bidder information.

2. Original signature(s) must appear on each page of the Bid document. All signatures must be executed by person(s) having contracting authority for the Bidder.

3. Absolutely no fax Bids or reproduction Bids will be accepted, except that photocopies may be submitted in addition to the original when multiple copies of the Bid are specifically requested in the solicitation.

4. The envelope in which the Bid response is submitted must be sealed and clearly labeled with the Bid number, project title, due date and time, and the name of the company or individual submitting the proposal. Bids must be received by the opening date and time shown on this Bid in order to be considered. The Purchasing Agent has no obligation to consider Bids which are not in properly marked envelopes. Contract Compliance submittals shall be submitted in a separate sealed envelope or package.

5. The original and the required number of copies of the Bid must be returned to:

   Fulton County Purchasing Agent
   Fulton County Purchasing Department
   130 Peachtree Street, S.W., Suite 1168
   Atlanta, Georgia 30303

   Any inquiries, questions, clarifications or suggestions regarding this solicitation should be submitted in writing to the Purchasing Contact Person. Contact with any other County personnel in regard to a current solicitation is strictly prohibited in accordance with Fulton County "No Contact" policy outlined in Section 35.

6. Show information and prices in the format requested. Prices are to be quoted F.O.B. Destination, and must include all costs chargeable to the Contractor executing the Contract, including taxes. Unless otherwise provided in the Contract, Fulton County shall have no liability for any cost not included in the price. The Contractor shall provide Fulton County the benefit through a reduction in price of any decrease in the Contractor's costs by reason of any tax exemption based upon Fulton County's status as a tax-exempt entity.

7. All prices Bid must be audited by the Bidder to ensure correctness before the Bid is submitted. The Bidder is solely responsible for the accuracy of information placed on a Bid sheet, including prices. Clerical or mathematical error is insufficient to void a successful Bid but a Bidder may withdraw a sealed Bid prior to opening without a penalty.

8. All prices must be submitted in the format requested and less all trade discounts. When multiple items are being Bid, Bidder must show both the unit price and the total extended price for each item.

When applicable, the Bidder must include an additional lump sum Bid for groups or items. In the event a Bidder is offering an additional discount on groups of items, Bidder must indicate the total lump sum Bid for the particular group of items before any extra discount, the amount of extra discount, and the net total for the particular group. In the event of an extension error, unit pricing shall prevail.

9. By submitting a signed Bid, Bidder agrees to accept an award made as a result of that Bid under the terms and conditions spelled out in the Bid documents. In the event of a conflict between the different Bid documents, the County's cover Contract (if used) shall have precedence, followed in order by the Invitation to Bid, Purchase Order, Bid, Contractor's Warranty Agreement, Maintenance Agreement, and/or other Contractor provided agreements.

10. A Bidder may submit only one (1) Bid response for each specific Bid solicitation unless otherwise authorized in the specifications.

11. All prices submitted by the Bidder to Fulton County must be guaranteed by the authorized person(s) against any price increase for the time period designated in the Bid specifications, and Fulton County must be given the benefit of any price decrease occurring during such designated time period.

12. All items Bid must be new. Used, rebuilt and refurbished items will not be considered unless specifically authorized by Fulton County in the written specifications.

13. All Bidders must specify in the Bid response the earliest actual delivery date for each item unless otherwise specified in writing by Fulton County. The delivery date may be a factor in deciding the Bidder's capability to perform.

14. A successful Bidder's delivery ticket(s) and invoice(s) must list each item separately and must show Fulton County's purchase order number as well as the proper department and address to which delivery was made, as listed on the purchase order or in the Bidder's contract with Fulton County.

15. Unless clearly shown as "no substitute" or words to that effect, any items in this invitation to Bid which have been identified, described or referenced by a brand name or trade name are for reference only. Such identification is intended to be descriptive but not restrictive, and is to indicate the general quality and characteristics of products that may be offered. Each item Bid must be individually identified as to whether it is a specified item or an equivalent item by typing or printing after the item(s): The brand name; model or manufacturer's number, or identification regularly used in the trade. Deviations from the specifications must be clearly and fully listed on the Bid sheet, including photographs or cuts, specifications, and dimensions of the proposed "alternate". Fulton County is the sole judge of "exact equivalent", or "alternate". The factors to be considered are: function, design, materials, construction, workmanship, finishes, operating features, overall quality, local service facilities, warranty terms and service, and other relevant features of item(s) Bid.

16. For all Bids, Fulton County reserves the right to request representative samples. If requested, samples must be delivered at the Bidder's cost within three (3) business days. Samples are submitted at the risk of the Bidder and may be subjected to destructive tests by Fulton County. Samples must be plainly tagged with Fulton County's Bid number, item name, manufacturer, and the name of the Bidder.

17. Item(s) Bid must be complete and ready to operate. No obvious omissions of components or necessary parts shall be made even though the specifications may not detail or mention them. Unit(s) must be furnished with factory installed equipment and must be comparable with the basic form, fit, and functional requirements which are all to be included in the base price as well as any other equipment included as standard by the manufacturer or generally provided to the buying public.

18. All successful Bidders must assume full responsibility for all item(s) damaged prior to F.O.B. Destination delivery and agree to hold harmless Fulton County of all responsibility for prosecuting damage claims.

19. All successful Bidders must assume full responsibility for replacement of all defective or damaged goods within thirty (30) days of notice by Fulton County of such defect or damage.

20. All successful Bidders must assume full responsibility for providing or ensuring warranty service on any and all items including goods, materials, or equipment provided to the County with warranty coverage. If a successful Bidder is not the manufacturer, all manufacturers' warranties must be passed through to Fulton County. The Bidder and not Fulton County is responsible for contacting the manufacturer of the warranty service provided during the warranty period and supervising the completion of the warranty service to the satisfaction of Fulton County.

21. As a successful Bidder providing any equipment which requires fitting and assembly, the Bidder shall be solely responsible for such installation being performed by a manufacturer's authorized or approved service or an experienced worker, utilizing workmanship of the highest caliber. The Bidder must verify all dimensions at the site, shall be responsible for their correctness, and shall be responsible for the availability of replacement parts when specified in writing by Fulton County in the specifications, purchase order, or other contract.

22. A successful Bidder is solely responsible for disposing of all wrappings, crating, and other disposable material upon deliver of item(s).

23. All Bidders are required to be authorized distributors or regularly engaged in the sale or distribution of the type of goods, materials, equipment or services for which the Bidder is submitting a Bid response in addition, all Bidders are required to provide Fulton County with three (3) written references documenting the successful completion of Bids or contracts for the types of items including goods, materials, equipment, or services for which the Bidder is submitting a Bid response. In instances where a Bidder has never supplied such goods, material, equipment, or services before, the Bidder must submit with the Bid response a statement and supporting documentation demonstrating such expertise, knowledge, or experience to establish the Bidder as a responsible Bidder, capable of meeting the Bid requirements should an award be made. No exceptions to this provision will be made unless authorized in the Bid specifications.

24. Bidders may be required to furnish evidence that they maintain permanent places of business of a type and nature compatible with their Bid proposal, and are in all respects competent and eligible vendors to fulfill the terms of the specifications. Fulton County may make such investigations as it deems necessary to determine the ability of the Bidder to perform such work, and reserves the right to reject any Bidder if evidence fails to indicate that the Bidder is qualified to carry out the obligation of the Contract and to complete the work satisfactorily.

25. All Bidders must comply with all Fulton County Purchasing laws, policies, and procedures, non-discrimination in contracting and procurement ordinances, and relevant state and federal laws including but not limited to compliance with EEOC hiring guidelines and requirements under the Americans with Disabilities Act. Successful Bidder must obtain all permits, licenses, and inspections as required and furnish all labor, materials, insurance, equipment, tools, supervision, and incidentals necessary to accomplish the work in these specifications.

26. If a successful Bidder is unable or unwilling to enter into a Contract with Fulton County subsequent to being granted an award, or who fails to perform in accordance with the Bid specifications the Bidder will be subject to damages and all other relief allowed by law.

27. Successful Bidders contract directly with Fulton County and are the party or parties obligated to perform. Contracts may not be assigned and any failure to perform the Contract in accordance with the specifications will constitute a breach of Contract and may result in a Bidder being found to be "non-responsive" in the future.

28. In case of default by the successful Bidder, Fulton County may procure the articles for services from another source and hold the successful Bidder responsible for any resulting excess cost.

29. The County may award any Bid in whole or in part to one or more vendors or reject all Bids and/or waive any technicalities if it is in the best interests of the County to do so. In the event that all Bids are not rejected, Bids for items including goods, materials, equipment, and services will be awarded to the lowest "responsible" Bidder(s) as determined by Fulton County. Submitting the lowest Bid, as published at the Bid opening, does not constitute an award or the mutual expectation of an award of a Contract and purchase order. For purposes of this notice and the attached Bid sheets, a purchase order is a Contract to provide items including goods, materials, equipment, and services and is intended to have the full force and effect of a Contract. A breach of the terms and conditions of a purchase order constitutes a breach of Contract.

30. Bids for projects that are solicited pursuant to the Georgia Local Government Public Works Construction Law (O.C.G.A. § 36-91-1 et seq.) may withdrawn as follows:

    Competitive sealed Bids ("Bid") may not be revoked or withdrawn until 60 days after the time set by the governmental entity for opening of Bids. At the end of this time period, the Bid will cease to be valid, unless the Bidder provides written notice to the County prior to the scheduled expiration date that the Bid will be extended for a time period specified by the County.

31. In the evaluation of the Bids, any award will be subject to the Bid being:

    A. Compliant to the specification – meets form, fit, and function requirements stated or implied in the specification.
    B. Lowest cost to the County over projected useful life.
    C. Administratively Compliant – Including all required bonds, insurance, established quality of work and general reputation, financial responsibility, relevant experience, and related criteria.

32. All proposals and Bids submitted to Fulton County are subject to the Georgia "Open Records Act", Official Code of Georgia, Annotated (O.C.G.A.) §50-18-70 et seq.

33. All proposals and Bids submitted to Fulton County involving Utility Contracting are subject to the Georgia law governing licensing of Utility Contractors, O.C.G.A. §43-14-8.2(h). The Utility Contractor License number of the person who will perform the utility work shall be written on the face of the Bid envelope.

34. The apparent silence of this specification, and any supplement thereto, as to details, of the omission from it of a detailed description concerning any point, will be regarded as meaning only the best commercial practices are to prevail. Only materials of the highest quality, correct type, size, and design are to be used. All interpretations of this specification will be made upon the basis of this statement, with Fulton County interpretation to prevail.

35. It is the policy of Fulton County that the evaluation and award process for County contracts shall be free from both actual and perceived impropriety, and that contacts between potential vendors and County officials, elected officials and staff regarding pending awards of County contracts shall be prohibited.

    A. No person, firm, or business entity, however situated or composed, obtaining a copy of or responding to this solicitation, shall initiate or continue any verbal or written communication regarding this solicitation with any County officer, elected official, employee, or designated County representative, between the date of the issuance of this solicitation and the date of the County Manager's recommendation to the Board of Commissioners for award of the subject contract, except as may otherwise be specifically authorized and permitted by the terms and conditions of this solicitation.

    B. All verbal and written communications initiated by such person, firm, or entity regarding this solicitation, if same are authorized and permitted by the terms and conditions of this

solicitation, shall be directed to the Purchasing Agent.

C. Any violation of this prohibition of the initiation or continuation of verbal or written communications with County officers, elected officials, employees, or designated County representatives shall result in a written finding by the Purchasing Agent that the submitted Bid or proposal of the person, firm, or entity in violation is “non-responsive”, and same shall not be considered for award.

36. Any Bidder intending to respond to this solicitation as a Joint Venture must submit an executed Joint Venture Agreement with this Bid. This agreement must designate those persons or entities authorized to execute documents or otherwise bind the Joint Venture in all transactions with Fulton County, or are accompanied by a document, binding upon the Joint Venture and its constituent members, making such designation. Bids from Joint Ventures that do not include these documents will be rejected as being “non-responsive”.

37. Any Bidder intending to respond to this solicitation must complete all of the Procurement Affidavit Forms provided in this solicitation. Bids that do not include these completed documents will be rejected as being “non-responsive”.

SECTION 3 - PURCHASING FORMS & INSTRUCTIONS

This section contains the procurement forms that are required to be executed and submitted with the bid package. This section does not contain all forms required to be included with the bid package submittal.

To be deemed responsive to this ITB, Bidders must provide the information requested and complete in detail all Purchasing Forms. The appropriate individual(s) authorized to commit the Bidder to the Project must sign the Purchasing Forms. Bidders should reproduce each Purchasing Form, as required, and complete the appropriate portions of the forms provided in this section.

- Form A: Non-Collusion Affidavit of Prime Bidder
- Form B: Non-Collusion Affidavit of Sub-Contractors
- Form C: Certificate of Acceptance of Request for Bid Requirements
- Form D: Contractor License Certification
- Form E: Certification Regarding Debarment
- Form F: Corporate Certification
- Form G: Non-Conflict of Interest Certification

3.1.1 - Form A - NON-COLLUSION AFFIDAVIT OF BIDDER/OFFEROR

STATE OF GEORGIA

COUNTY OF FULTON

I, _____ certify that pursuant to Fulton County Code Section 2-320 (11), this bid or proposal is made without prior understanding, agreement or connection with any corporation, firm or person submitting a bid for the same work, labor or service to be done or the supplies, materials or equipment to be furnished and is in all respects fair and without collusion or fraud. I understand collusive bidding is a violation of state and federal law and can result in fines, prison sentences and civil damages awards. I agree to abide by all conditions of this bid or proposal and certify that I am authorized to sign this bid or proposal for the bidder.

Affiant further states that pursuant to O.C.G.A. Section 36-91-21 (d) and (e), _____ has not, by itself or with others, directly or indirectly, prevented or attempted to prevent competition in such bidding or proposals by any means whatsoever. Affiant further states that (s)he has not prevented or endeavored to prevent anyone from making a bid or offer on the project by any means whatever, nor has Affiant caused or induced another to withdraw a bid or offer for the work.

Affiant further states that the said offer of _____ is bona fide, and that no one has gone to any supplier and attempted to get such person or company to furnish the materials to the bidder only, or if furnished to any other bidder, that the material shall be at a higher price.

_____
(COMPANY NAME)

_____
(PRESIDENT/VICE PRESIDENT)

Sworn to and subscribed before me this _____ day of _____, 200__.

_____
(SECRETARY/ASSISTANT SECRETARY)

(Affix corporate seal here, if a corporation)

Notary Public: _____

County: _____

Commission Expires: _____

NOTE:

IF THE OFFEROR IS A PARTNERSHIP, ALL OF THE PARTNERS AND ANY OFFICER, AGENT, OR OTHER PERSON WHO MAY HAVE REPRESENTED OR ACTED FOR THEM IN BIDDING FOR OR PROCURING THE CONTRACT SHALL ALSO MAKE THIS OATH.

IF THE OFFEROR IS A CORPORATION, ALL OFFICERS, AGENTS, OR OTHER PERSONS WHO MAY HAVE ACTED FOR OR REPRESENTED THE CORPORATION IN BIDDING FOR OR PROCURING THE CONTRACT SHALL MAKE THE OATH.

3.1.2 - Form B - NON-COLLUSION AFFIDAVIT OF SUBCONTRACTOR

STATE OF GEORGIA

COUNTY OF FULTON

I, _____ certify that pursuant to Fulton County Code Section 2-320 (11), this bid or proposal is made without prior understanding, agreement or connection with any corporation, firm or person submitting a bid for the same work, labor or service to be done or the supplies, materials or equipment to be furnished and is in all respects fair and without collusion or fraud. I understand collusive bidding is a violation of state and federal law and can result in fines, prison sentences and civil damages awards. I agree to abide by all conditions of this bid or proposal and certify that I am authorized to sign this bid or proposal for the bidder.

Affiant further states that pursuant to O.C.G.A. Section 36-91-21 (d) and (e), _____ has not, by itself or with others, directly or indirectly, prevented or attempted to prevent competition in such bidding or proposals by any means whatsoever. Affiant further states that (s)he has not prevented or endeavored to prevent anyone from making a bid or offer on the project by any means whatever, nor has Affiant caused or induced another to withdraw a bid or offer for the work.

Affiant further states that the said offer of _____ is bona fide, and that no one has gone to any supplier and attempted to get such person or company to furnish the materials to the bidder only, or if furnished to any other bidder, that the material shall be at a higher price.

_____
(COMPANY NAME)

_____
(PRESIDENT/VICE PRESIDENT)

Sworn to and subscribed before me this _____ day of _____, 200__.

_____
(SECRETARY/ASSISTANT SECRETARY)

(Affix corporate seal here, if a corporation)

Notary Public: _____

County: _____

Commission Expires: _____

NOTE:

IF THE OFFEROR IS A PARTNERSHIP, ALL OF THE PARTNERS AND ANY OFFICER, AGENT, OR OTHER PERSON WHO MAY HAVE REPRESENTED OR ACTED FOR THEM IN BIDDING FOR OR PROCURING THE CONTRACT SHALL ALSO MAKE THIS OATH.

IF THE OFFEROR IS A CORPORATION, ALL OFFICERS, AGENTS, OR OTHER PERSONS WHO MAY HAVE ACTED FOR OR REPRESENTED THE CORPORATION IN BIDDING FOR OR PROCURING THE CONTRACT SHALL MAKE THE OATH.

3.1.3 - Form C - CERTIFICATE OF ACCEPTANCE OF BID/PROPOSAL REQUIREMENTS

This Is To Certify That On This Day Bidder/Proposer Acknowledges That He/She Has Read This Bid Document, Pages _____ To _____ Inclusive, Including Addendum(s) ___ To ___, And/Or Appendices To ___, In Its Entirety, And Agrees That No Pages Or Parts Of The Document Have Been Omitted, That He/She Understands, Accepts And Agrees To Fully Comply With The Requirements Therein, And That The Undersigned Is Authorized By The Bidding/Proposing Company To Submit The Bid/Proposal Herein And To Legally Obligate The Bidder/Proposer Thereto.

Company: _____

Signature: _____

Name: _____

Title: _____

Date: _____

(Corporate Seal)

3.1.4 - Form D - CONTRACTOR'S LICENSE CERTIFICATION

Contractor's Name: _____

Utility Contractor's Name: _____

Expiration Date of License:_____

(ATTACHED COPY OF LICENSE)

I certify that the above information is true and correct and that the classification noted is applicable to the Bid for this Project.

Signed: _____

Date: _____

Additionally, Bidder/Proposer is to write their **Utility Contractor License Number on the outside of the sealed package containing the cost proposal.** Failure to put the Utility Contractor License number on the package will result in the bi/proposal being determined to be non-responsive.

UTILITY CONTRACTOR. All Bidders/Proposers shall comply with the requirements of O.C.G.A. § 43-14-8.2(h) which states:

After June 30, 1994, it shall be unlawful for any contracting body to open or consider any bid/proposal for utility contracting unless the bidder/proposer has obtained the license required by this Code section or intends to have the utility contracting work performed by another person who has obtained such license. The utility contractor's license number of the person who will perform the utility works hall be written on the face of the bid envelope, unless otherwise provided. If 50 percent or more of any multifaceted project being proposed is utility work, the bidder must have obtained a utility license and his or her number must be written on the face of the bid. (Code 198, §43-14-8.2, enacted by GA. L. 1989, P.175, §7; Ga. L. 1993, p.123, § 31; Ga. L. 1993, p1339, §7, Ga. L. 1994, p. 1 §1; Ga. L. 1994, p. 383, §4)

ANY BIDDER/PROPOSER FAILING TO COMPLY WITH THE REQUIREMENTS OF PLACING ITS UTILITY CONTRATOR'S LICENSE NUMBER ON THE FACE OF THE BID/PROPOSAL ENVELOPE SHALL BE DEEMED NON-RESPONSIVE ANDITS BID/PROPOSAL SHALL NOT BE OPENED.

3.1.5 - Form E - CERTIFICATION REGARDING DEBARMENT

(1) The Offeror certifies that neither it or its subcontractors is presently debarred, suspended, proposed for debarment, declared ineligible, or otherwise excluded from doing business with any government agency. Any such exclusion may cause prohibition of your firm from participating in any procurement by the Fulton County Government.

(2) If the Offeror is unable to certify to any of the statements in this certification, such Offeror or subcontractor shall attach an explanation to this bid or proposal.

INSTRUCTIONS FOR CERTIFICATION

By signing and submitting this certification, the Offeror is providing the certification set out below:

(1) The certification in this clause is a material representation of fact upon which reliance will be placed. If it is later determined that the prospective vendor knowingly rendered a false certification, the Purchasing Agent may pursue all available remedies, including suspension and/or debarment, for withdrawal of award or termination of a contract.

(2) The prospective Offeror shall provide immediate written notice to the Purchasing Agent if at anytime the Offeror learns that its certification was erroneous when submitted or has become erroneous by reason of changed circumstances.

(3) Offeror shall be under a continuing duty to immediately inform the Purchasing Agent in writing of any changes, if as a result of such changes, the Offeror certification regarding debarment is affected.

DEBARMENT ORDINANCE

The following Section 2-322 of Fulton County Code of Laws establishes the procedure for the debarment of contractors.

(a) ***Authority to suspend.***

After reasonable notice to the entity involved and reasonable opportunity for that entity to be heard, the Purchasing Agent, after consultation with user department, the County Manager and the County Attorney shall have the authority to suspend an entity for cause from consideration for award of county contracts. As used in this section, the term entity means any business entity, individual, firm, contractor, subcontractor or business corporation, partnership, limited liability corporation, firm, contractor, subcontractor or business structured; provided, further, that any such entity shall also be subject to suspension under this section if any of its constituents, members, subcontractors at any tier of such entity's and the entity, or any constituent or member, knew or should have known of the commission of the act. The suspension shall be for a period not to exceed three (3) years unless cause is based on a felony conviction for an offense related or associated with fraudulent contracting or misappropriation of funds wherein the suspension shall not exceed seven (7) years.

(b) *Causes for Suspension.* The causes for suspension include:

1) Conviction for commission of a criminal offense as an incident to obtain or attempting to obtain a public or private contract or subcontract, or in performance of such contract or subcontract;

2) Conviction of state or federal statutes of embezzlement, theft, forgery, bribery, falsification or destruction of records, receiving stolen property or other offense indicating a lack of business integrity or business honesty which currently, seriously and directly affects responsibility as a county contractor.

3) Conviction of state or federal anti-trust statues arising out of the solicitation and submission of bids and proposals;

4) Violation of contract provisions, as set forth below, of a character which is regarded by the Purchasing Agent to be so serious as to justify suspension action:

   a. Failure to perform in accordance with the specifications within a time limit provided in a county contract;

   b. A recent record of failure to perform or unsatisfactory performance in accordance with the terms of one or more contracts; provided, that failure to perform or unsatisfactory performance caused by acts beyond the control of the contractor shall not be considered to be a basis for suspension;

   c. Material representation of the composition of the ownership or workforce or business entity certified to the county as a minority business enterprise; or

   d. Falsification of any documents.

i. For violation of the ethical standards set forth in Fulton County Code Chapter 9, Code of Ethics.

ii. Knowing misrepresentation to the county, of the use which a majority owned contractor intends to make a minority business enterprise (a business entity at least 51 percent of which is owned and controlled by minority persons, as defined in Fulton County Code Chapter 6, Article B, Minority
Business Enterprise Affirmative Action Program and certified as such by the County) as a subcontractor or a joint venture partner, in performing work under contract with the County.

Failure to fully and truthfully provide the information required, may result in the disqualification of your bid/proposal from consideration or termination of the Contract, once awarded. This document must be completed and included as a part of the bid/proposal package along with other required documents.

[SIGNATURES ON NEXT PAGE]

Under penalty of perjury, I declare that I have examined this certification and all attachments hereto, if applicable, to the best of my knowledge and belief, and all statements contained hereto are true, correct, and complete.

On this _____ day of _____, 2005

_____

(Legal Name of Offeror) (Date)

_____

(Signature of Authorized Representative) (Date)

_____

(Title)

3.1.6 - Form F - CORPORATE CERTIFICATE

Corporations

I, _____, certify that I am the Secretary of the Corporation named as Contractor in the foregoing Bid; that _____, who signed said Bid on behalf of the Contractor was then _____ of said Corporation; that said Bid was duly signed for and on behalf of said Corporation by authority of its Board of Directors, and is within the scope of its corporate powers; that said Corporation is organized under the laws of the State of _____.

This _____day of _____, 20 ___ .

_____
(SEAL) must be affixed

Partnership or other entities:

I, _____, certify that I am authorized to sign to commit _____ named as Contractor in the foregoing Bid. That said company is formed under the laws of the State of _____.

This _____day of _____, 20 ___ .

_____

It is necessary to attach a letter on company letterhead and dated on or after the date of this certificate that the individual signing to commit the partnership or other entity not a corporation to the stipulations of this bid is authorized to do so. The letter should be signed by an individual working for the company who has knowledge of this fact.

3.1.7 - Form G - NON CONFLICT OF INTEREST CERTIFICATION

I,_____, as the legal representative of _____, do certify that we will not perform any type of professional services for property owners adjacent or contiguous to any project assigned by Fulton County, during the active life of such project. Further, I additionally certify that if we already have an agreement(s) with property owner(s) adjacent or contiguous to a project assigned by Fulton County, we will either reject the County assignment, or cancel the property owner already in effect if so directed by Fulton County Board of Commissioners. In no case will our firm utilize our knowledge of the ongoing Fulton County project for professional gain during the active life of such Project.

Name: _____

Title: _____

Date: _____

Witness: _____

Name: _____

Title: _____

Date: _____

3.1.8 – Form H - CERTIFICATE AS TO CORPORATE PRINCIPAL

I, _____, certify that I am the Secretary of the Corporation named as principal in the within bond; that _____,
Who signed the said bond of said corporation; that I know this signature, and his/her signature thereto is genuine; and that said bond was duly signed, sealed and attested for in behalf of said Corporation by authority of its governing body.

_____
SECRETARY

(CORPORATE SEAL)

_____
SURETY

_____ BY_____
(SEAL)

SECTION 4 – Contract Compliance Requirements

NON-DISCRIMINATION IN CONTRACTING AND PROCUREMENT

Policy Statement: It is the policy of Fulton County Government that discrimination against businesses by reason of the race, color, gender or national origin of the ownership of any such business is prohibited. Furthermore, it is the policy of the Board of Commissioners ("Board") that Fulton County and all vendors and contractors doing business with Fulton County shall provide to all businesses the opportunity to participate in contracting and procurement paid, in whole or in part, with monetary appropriations of the Board. Similarly, it is the policy of the Board that the contracting and procurement practices of Fulton County should not implicate Fulton County as either an active or passive participant in the discriminatory practices engaged in by private contractors seeking to obtain contracts with Fulton County.

Equal Business Opportunity Plan (EBO Plan): In addition to the proposal submission requirements, each vendor **must** submit an Equal Business Opportunity Plan (EBO Plan) with their bid/proposal. The EBO Plan is designed to enhance the utilization of a particular racial, gender or ethnic group by a bidder/proposer, contractor, or vendor or by Fulton County. The respondent **must** outline a plan of action to encourage and achieve diversity and equality in the available procurement and contracting opportunities with *this solicitation*.

The EBO Plan **must** identify and include:

1. Potential opportunities within the scope of work of *this solicitation* that will allow for participation of racial, gender or ethnic groups.

2. Efforts that will be made by the bidder/proposer to encourage and solicit minority and female business utilization in this solicitation.

Fulton County encourages joint ventures, teaming, partnering and mentor-protégé relationships with minority and female businesses in an effort to achieve contracting and procurement diversity.

Prompt Payment: The prime contractor **must** certify in writing and **must** document on the Exhibit G Form (Prime Contractor/Subcontractor Utilization Report) that all subcontractors, sub-consultants and suppliers have been promptly paid for work and materials, (less any retainage by the prime contractor prior to receipt of any further progress payments). In the event the prime contractor is unable to pay subcontractors, sub-consultants or suppliers until it has received a progress payment from Fulton County, the prime contractor shall pay all subcontractors, sub-consultants or suppliers funds due from said progress payments within forty-eight (48) hours of receipt of payment from Fulton County. In no event shall a subcontractor, sub-consultant or supplier be paid later than fifteen (15) days as provided for by state law.

REQUIRED FORMS AND EBO PLAN:

In order to be compliant with the intent and provisions of the Fulton County Non-Discrimination in Purchasing and Contracting Ordinance (99-0960), bidders/proposers **must** submit the following completed documents. Failure to provide this information **shall** result in the bid/proposal being deemed non-responsive:

- **Exhibit A** - Promise of Non-Discrimination
- **Exhibit B** - Employment Report
- **Exhibit C** - Schedule of Intended Subcontractor Utilization
- **Exhibit D** - Letter of Intent to Perform As a Subcontractor or Provide Materials or Services
- **Exhibit E** - Declaration Regarding Subcontractor Practices
- **Exhibit F** - Joint Venture Disclosure Affidavit
- **Equal Business Opportunity Plan (EBO Plan)** – This document is not a form. It is a statement created by the bidder/proposer on its company letter head addressing the EBO Plan requirements.

All Contract Compliance documents (Exhibits A – F and EBO Plan) are to be placed in a **separate sealed envelope** clearly marked "Contract Compliance". The EBO Plan must be submitted on company letterhead. These documents are considered part of and should be submitted with the Technical Proposal.

The following document **must** be completed as instructed if awarded the bid:

- **Exhibit G** - Prime Contractor's Subcontractor Utilization Report

EXHIBIT A – PROMISE OF NON-DISCRIMINATION

"Know all persons by these presents, that I/WE (_____),
Name

_____ _____
Title Firm Name

Hereinafter "Company"), in consideration of the privilege to bid on or obtain contracts funded, in whole or in part, by Fulton County, hereby consent, covenant and agree as follows:

1) No person shall be excluded from participation in, denied the benefit of, or otherwise discriminated against on the basis of race, color, national origin or gender in connection with any bid submitted to Fulton County for the performance of any resulting there from,

2) That it is and shall be the policy of this Company to provide equal opportunity to all businesses seeking to contract or otherwise interested in contracting with this Company without regard to the race, color, gender or national origin of the ownership of this business,

3) That the promises of non-discrimination as made and set forth herein shall be continuing in nature and shall remain in full force and effect without interruption,

4) That the promise of non-discrimination as made and set forth herein shall be made a part of, and incorporated by reference into, any contract or portion thereof which this Company may hereafter obtain,

5) That the failure of this Company to satisfactorily discharge any of the promises of non-discrimination as made and set forth herein shall constitute a material breach of contract entitling the Board to declare the contract in default and to exercise any and all applicable rights and remedies, including but not limited to cancellation of the contract, termination of the contract, suspension and debarment from future contracting opportunities, and withholding and/or forfeiture of compensation due and owning on a contract; and

6) That the bidder shall provide such information as may be required by the Director of Contract Compliance pursuant to Section 4.4 of the Fulton County Non-Discrimination in Purchasing and Contracting Ordinance.

SIGNATURE: _____

ADDRESS: _____

_____

TELEPHONE NUMBER: _____

EXHIBIT B – EMPLOYMENT REPORT

The demographic employment make-up for the bidder **must** be identified and submitted with this bid/proposal. In addition, if subcontractors will be utilized by the bidder/proposer to complete this project, then the demographic employment make-up of the subcontractor(s) must be identified and submitted with this bid.

EMPLOYEES

CATEGORY	NATIVE INDIAN		AFRICAN AMERICAN		ASIAN AMERICAN		HISPANIC AMERICAN		CACUSIAN AMERICAN		OTHER	
Male/Female	M	F	M	F	M	F	M	F	M	F	M	F
Mgmt/Official												
Professional (Arch., P.E., etc.)												
Supervisors												
Office/ Clerical												
Craftsmen												
Laborers												
Others (Specify)												
TOTALS												

FIRM'S NAME:_____

ADDRESS:_____

_____

TELEPHONE NUMBER:_____

This completed form is for (Check one) _____Bidder/Proposer _____Subcontractor

Submitted by: _____ Date Completed:_____

EXHIBIT C – SCHEDULE OF INTENDED SUBCONTRACTOR UTILIZATION

If the bidder/proposer intends to subcontract any portion of this scope of work/service(s), this form **must be** completed and **submitted with the bid/proposal.** All prime bidders/proposers **must** include Letter(s) of Intent (Exhibit D) in the bid document for all subcontractors who will be utilized under the scope of work/services.

Prime Bidder/Proposer:_____

ITB/RFP NUMBER:_____

Project Name or Description of Work/Service(s):_____

_____

_____

1. My firm, as Prime Bidder/Proposer on this scope of work/service(s) is_____is not___a minority or female owned and controlled business. (Please indicate below the portion of work, including, percentage of bid amount that your firm will carry out directly):

   _____

   _____

   If the Prime Bidder/Proposer is a Joint Venture, please complete Exhibit F: Joint Venture Disclosure Affidavit and attach a copy of the executed Joint Venture Agreement.

2. Sub-Contractors (Including suppliers) to be utilized in the performance of this scope of work/service(s), if awarded, are:

SUBCONTRATOR NAME:_____

ADDRESS:_____

_____

PHONE:_____

CONTACT PERSON:_____

ETHNIC GROUP*:_____COUNTY CERTIFIED**_____

WORK TO BE PERFORMED:_____

_____

DOLLAR VALUE OF WORK: $_____ PERCENTAGE VALUE: _____%

***Ethnic Groups: African American (AABE); Asian American (ABE); Hispanic American (HBE); Native American (NABE); White Female American (WFBE); **If yes, attach copy of recent**

certification letter.

EXHIBIT C – SCHEDULE OF INTENDED SUBCONTRACTOR UTILIZATION

SUBCONTRATOR NAME:_____

ADDRESS:_____

_____

PHONE: _____

CONTACT PERSON:_____

ETHNIC GROUP*:_____COUNTY CERTIFIED**_____

WORK TO BE PERFORMED:_____

DOLLAR VALUE OF WORK: $_____PERCENTAGE VALUE:_____%

SUBCONTRATOR NAME:_____

ADDRESS:_____

_____

PHONE: _____

CONTACT PERSON:_____

ETHNIC GROUP*:_____COUNTY CERTIFIED**_____

WORK TO BE PERFORMED:_____

DOLLAR VALUE OF WORK: $_____PERCENTAGE VALUE:_____%

SUBCONTRATOR NAME:_____

ADDRESS:_____

_____

PHONE: _____

CONTACT PERSON:_____

ETHNIC GROUP*:_____COUNTY CERTIFIED**_____

WORK TO BE PERFORMED:_____

DOLLAR VALUE OF WORK: $_____PERCENTAGE VALUE:_____%

SUBCONTRATOR NAME:_____

ADDRESS:_____

_____

PHONE: _____

CONTACT PERSON:_____

ETHNIC GROUP*:_____COUNTY CERTIFIED**_____

WORK TO BE PERFORMED:_____

DOLLAR VALUE OF WORK: $_____PERCENTAGE VALUE:_____%

Total Dollar Value of Small Business Enterprise Agreements: ($)

Total Percentage Value: (%)

CERTIFICATION: The undersigned certifies that he/she has read, understands and agrees to be bound by the Bid provisions, including the accompanying Exhibits and other terms and conditions regarding sub-contractor utilization. The undersigned further certifies that he/she is legally authorized by the Bidder to make the statement and representation in this Exhibit and that said statements and representations are true and correct to the best of his/her knowledge and belief. The undersigned understands and agrees that if any of the statements and representations are made by the Bidder knowing them to be false, or if there is a failure of the intentions, objectives and commitments set forth herein without prior approval of the County, then in any such event the Contractor's acts or failure to act, as the case may be, shall constitute a material breach of the contract, entitling the County to terminate the Contract for default. The right to so terminate shall be in addition to, and in lieu of, any other rights and remedies the County may have for other defaults under the contract.

Signature/Title:_____

Firm or Corporate Name:_____

Address:_____

_____

Telephone: ( )_____ **Fax Number: ( )**_____

Email _____

***Ethnic Groups: African American (AABE); Asian American (ABE); Hispanic American (HBE); Native American (NABE); White Female American (WFBE); **If yes, attach copy of recent certification letter.**

EXHIBIT D

LETTER OF INTENT TO PERFORM AS A SUBCONTRACTOR OR PROVIDE MATERIALS OR SERVICES

This form **must** be completed by **ALL** known subcontractors/suppliers and submitted with the bid. The Prime Contractor **must** submit Letters of Intent for ALL known subcontractors/suppliers at time of bid submission.

To:_____
(Name of Prime Contractor Firm)

From:_____
(Name of Subcontractor Firm)

ITB/RFP Number:_____

Project Name:_____

The undersigned is prepared to perform the following described work or provide materials or services in connection with the above project (specify in detail particular work items, materials, or services to be performed or provided):

Description of Work	Project Commence Date	Project Completion Date	Estimated Dollar Amount

_____ _____
(Prime Bidder) **(Subcontractor)**

Signature_____ **Signature**_____

Title_____ **Title**_____

Date_____ **Date**_____

EXHIBIT E – DECLARATION REGARDING SUBCONTRACTING PRACTICES

If the bidder/proposer **does not intend to subcontract** any portion of the scope of work services(s), this form **must be** completed and submitted with the bid.

_____Hereby declares that it is my/our intent to **(Bidder)**

Perform 100% of the work required for_____
(IFB/RFP Number)

_____
(Description of Work)

In making this declaration, the bidder/proposer states the following:

1. That the bidder does not customarily subcontract elements of this type project, and normally performs and has the capability to perform and will perform **all elements** of the work on this project with his/her own current work forces;

2. If it should become necessary to subcontract some portion of the work at a later date, the bidder will comply with all requirements of the County's Non-Discrimination Ordinance in providing equal opportunities to all firms to subcontract the work. The determination to subcontract some portion of the work at a later date shall be made in good faith and the County reserves the right to require additional information to substantiate a bidder's decision to subcontract work following the award of the contract. Nothing contained in this provision shall be employed to circumvent the spirit and intent of the County's Non-Discrimination Ordinances;

3. The bidder will provide, upon request, information sufficient for the County to verify Item Number one.

AUTHORIZED COMPANY REPRESENTATIVE

Name:_____ **Title:**_____ **Date:**_____

Signature:_____

Firm:_____

Address:_____

Phone Number:_____

Fax Number:_____

Email Address:_____

EXHIBIT F – JOINT VENTURE DISCLOSURE AFFIDAVIT

IFB No._____

Project Name_____

This form must be completed and submitted with the bid if a Joint Venture approach is to be undertaken.

The firms listed below do hereby declare that they have entered into a joint venture agreement pursuant to the above mentioned project. The information requested below is to clearly identify and explain the extent of participation of each firm in the proposed joint venture. All items must be properly addressed before the business entity can be evaluated.

1. Firms:

1) Name of Business:_____
   Street Address:_____
   City/State/Zip:_____
   County:_____
   Nature of Business:_____

2) Name of Business:_____
   Street Address:_____
   City/State/Zip:_____
   County:_____
   Nature of Business:_____

3) Name of Business:_____
   Street Address:_____
   City/State/Zip:_____
   County:_____
   Nature of Business:_____

NAME OF JOINT VENTURE (If applicable):_____

OFFICE ADDRESS:_____

PRINCIPAL _____

OFFICE PHONE:_____

EXHIBIT F – JOINT VENTURE DISCLOSURE AFFIDAVIT

Note: Attach additional sheets as required

1. Describe the capital contributions by each joint venturer and accounting thereof. Indicate the percentage make-up for each joint venture partner.

2. Describe the financial controls of the joint venture, e.g., will a separate cost center be established? Which venturer will be responsible for keeping the books? How will the expense therefore be reimbursed? What is the authority of each joint venture to commit or obligate the order?

3. Describe any Ownership, options for Ownership, or loans between the joint ventures. Identify terms thereof.

4. Describe the estimate contract cash flow for each joint venturer.

5. To what extent and by whom will the on-site work be supervised?

6. To what extent and by whom will the administrative office be supervised?

7. Which joint venturer will be responsible for material purchases including the estimated cost thereof? How will the purchase be financed?

8. Which joint venturer will provide equipment? What is the estimated cost thereof? How will the equipment be financed?

9. Describe the experience and business qualifications of each joint venturer.

10. Submit a copy of all joint venture agreements and evidence of authority to do business in the State of Georgia as well as locally, to include all necessary business licenses.

11. Percent of ownership by each joint venture in terms of profit and loss sharing:____
_____

12. The authority of each joint venturer to commit or obligate the other:_____
_____

13. Number of personnel to be involved in project, their crafts and positions and whether they are employees of the small business enterprise, the majority firm or the joint venture:_____
_____

14. Identification of control and participation in venture; list those individuals who are responsible for day-to-day management and policy decision-maker, including, but not limited to, those with prime responsibility for areas designated below; (use additional sheets if necessary)

Name	Race	Sex	Financial Decisions	Supervision Field Operation
_____	_____	_____	_____	_____
_____	_____	_____	_____	_____
_____	_____	_____	_____	_____
_____	_____	_____	_____	_____
_____	_____	_____	_____	_____

In connection with any work that these firms, as a joint venture, might be authorized to perform in connection with above captioned contract, we each do hereby authorize representatives of the Fulton County Department of Contract Compliance, Departments of Purchasing and Finance, under the direction of the County Manger's Office, to examine, from time to time, the books, records and files to the extent that such relate to this County project.

WE DO SOLEMNLY DECLARE AND AFFIRM UNDER THE PENALTIES OF PERJURY THAT THE CONTENTS OF THE FOREGOING DOCUMENT ARE TRUE AND CORRECT, AND THAT WE ARE AUTHORIZED, ON BEHALF OF THE ABOVE FIRMS, TO MAKE THIS AFFIDAVIT AND GRANT THE ABOVE PRIVILEGE.

FOR:_____
(Company)

Date:_____ _____
(Signature of Affiant)

_____
(Printed Name)

_____
(Company)

Date:_____ _____
(Signature of Affiant)

_____
(Printed Name)

State of_____**:**

County of_____**:**

On this _____ **day of** _____**, 20**_____**, before me, appeared**

_____**, the undersigned known to me to be the person described in the foregoing Affidavit and acknowledge that he (she) executed the same in the capacity therein stated and for the purpose therein contained.**

EXHIBIT G – PRIME CONTRACTOR/SUBCONTRACTOR UTILIZATION REPORT

This report is required to be submitted by the tenth day of each month, with a copy of your payment invoice (schedule of values/payment application) to Contract Compliance. Failure to comply may result in the County commencing proceedings to impose sanctions on the successful bidder, in addition to purchasing any other available legal remedy. Sanctions may include the suspending of any payment or part thereof, termination or cancellation of the contract, and the denial to participate in any future contracts awarded by Fulton County.

REPORTING PERIOD		PROJECT NAME:	
FROM:		PROJECT NUMBER:	
TO:		PROJECT LOCATION:	

PRIME CONTRACTOR		Contract Award Date	Contract Award Amount	Change Order Amount	Contract Period	% Complete to Date
Name:						
Address:						
Telephone #:						

AMOUNT OF REQUISITION THIS PERIOD:$_____

TOTAL AMOUNT REQUISITION TO DATE:$_____

SUBCONTRACTOR UTILIZATION (add additional rows as necessary)

Name of Sub-contractor	Description of Work	Contract Amount	Amount Paid To Date	Amount Requisition This Period	Contract Period Starting Date	Ending Date
TOTALS						

Executed By:_____ _____

(Signature) (Printed Name)

SECTION 5 - INSURANCE and RISK MANAGEMENT REQUIREMENTS

It is Fulton County Government's practice to obtain Certificates of Insurance from our Contractors and Vendors. Insurance must be written by a licensed agent in a company licensed to write insurance in the State of Georgia. Respondents shall submit with the bid/Bid evidence of insurability satisfactory to Fulton County Government as to form and content. Either of the following forms of evidence is acceptable.

- A letter from an insurance company stating that upon your firm/company being the successful Bidder/Respondent that a Certificate of Insurance shall be issued in compliance with the Insurance and Risk Management Provision outlined below.

- A Certificate of Insurance complying with the Insurance and Risk Management Provisions outlined below (Request for Bid/Bid number and Project Description must appear on the Certificate.

Upon award, the Contractor/Vendor must maintain, at their expense, insurance with policy limits equal to or greater than the limits described below. Any and all Insurance Coverage(s) and Bonds required under the terms and conditions of the contract shall be maintained during the entire length of the contract, including any extensions or renewals thereto, and until all work has been completed to the satisfaction of Fulton County Government

Accordingly the Respondent shall provide a certificate evidencing the following:

1. **WORKERS COMPENSATION - STATUTORY (In compliance with the Georgia Workers Compensation Acts and any other State or Federal Acts or Provisions in which jurisdiction may be granted)**

EMPLOYER'S LIABILTY INSURANCE (Aggregate)	**BY ACCIDENT**	**- EACH ACCIDENT**	**-**	**$500,000**
	BY DISEASE	**- POLICY LIMIT**	**-**	**$500,000**
	BY DISEASE	**- EACH EMPLOYEE**	**-**	**$500,000**

2. **COMMERCIAL GENERAL LIABILITY INSURANCE (Including contractual Liability Insurance)**

Bodily Injury and Property Damage Liability (Other than Products/Completed Operations)	Each Occurrence	-	**$1,000,000**
	General Aggregate	-	**$2,000,000**
Products/Completed Operation	Aggregate Limit	-	**$1,000,000**
Personal and Advertising Injury	Limits	-	**$1,000,000**
Fire Damage	Limits	-	**$ 100,000**

3. **BUSINESS AUTOMOBILE LIABILITY INSURANCE**
   Combines Single Limits Each Occurrence - **$1,000,000**
   (Including operation of non-owned, owned, and hired automobiles).

4. **ELECTRONIC DATA PROCESSING LIABILITY**
   (Required if computer contractor). Limits - **$1,000,000**

5. **UMBRELLA LIABILITY**
   (Including excess of above noted coverage's) Each Occurrence - **$2,000,000**

6. **PROFESSIONAL LIABILITY** Each Occurrence - **$1,000,000**
   (Required if respondent providing quotation for professional services).

7. **FIDELITY BOND** Each Occurrence - **$100,000**
   (Employee Dishonesty)

Certificates shall state that the policy or policies shall not expire, be cancelled or altered without at least thirty (30) days prior written notice to Fulton County Government. Policies and Certificates of Insurance are to list Fulton County Government as an Additional Insured (except for Workers' Compensation) and shall conform to all terms and conditions (including coverage of the indemnification and hold harmless agreement) contained in the Insurance and Risk Management Provisions.

If Fulton County Government shall so request, the Offeror, Contractor or Vendor will furnish the County for its inspection and approval such policies of insurance with all endorsements, or confirmed specimens thereof certified by the insurance company to be true and correct copies.

Such certificates and notices shall be sent to:

Fulton County Government – Purchasing Department
130 Peachtree Street, S.W.
Suite 1168
Atlanta, Georgia 30303-3459

The Contractor/Vendor shall insure that the Request for Bid/Bid number and Project Description appears on the Certificate of Insurance. It is understood that

Insurance in no way Limits the Liability of the Contractor/Vendor.

SECTION 6 - SAMPLE AGREEMENT

[INSERT PROJECT # AND TITLE]

Contractor: _____ Project No. _____

Address: _____ Telephone: _____

Contact: _____ Facsimile: _____

THIS AGREEMENT is effective as of the _____ day of _____, 2005, by and between Fulton County, a political subdivision of the State of Georgia (hereinafter called the "County"), and the above named CONTRACTOR in accordance with all provisions of this Construction agreement, consisting of the following Contract Documents:

General Conditions
Special Conditions
Bonds
Bid Form
Fulton County Construction Standards and Specifications
Drawings
Addenda
Exhibits
Purchasing Forms
Office of Contract Compliance Forms

WITNESSETH: That the said Contractor has agreed, and by these presents does agree with the said County, for an in consideration of a Contract Price of _____($_____) and other good and valuable consideration, and under the penalty expressed on Bonds hereto attached, to furnish all equipment, tools, materials, skill, and labor of every description necessary to carry out and complete in good, firm, and substantial, and workmanlike manner, the Work specified, in strict conformity with the Drawings and the Specifications hereinafter set forth, which Drawings and Specifications together with the bid submittals made by the Contractor, General Conditions, Special Provisions, Detailed Specifications, Exhibits, and this Agreement, shall all form essential parts of this Contract. The Work covered by this Contract includes all Work indicated on Plans and Specifications and listed in the Bid entitled:

Project Number: [INSERT PROJECT #]

The Contractor shall commence the Work with adequate force and equipment on a date to be specified in a written Notice to Proceed and shall fully complete all work within time constraints indicated in the Notice to Proceed (NTP). The duration of the contract shall be 365 consecutive calendar days from the date of award by the Board of Commissioners. Fulton County reserves the right to renew this contract for one (1) additional 365 consecutive calendar day period pending availability of funding, contractor compliance with county rules and policies, satisfactory work performance by the contractor and Board of

Commissioners approval. Option year prices shall be maintained at the rates approved in the initial contract term. The Contractor shall remain responsible for performing, in accordance with the terms of the contract, all work assigned prior to the expiration of the said calendar days allowed for completion of the work even if the work is not completed until after the expiration of such days.

For each calendar day that any work remains uncompleted after the NTP time allowed, the Contractor shall pay the County the sum of $ 1,000.00 not as a penalty but as liquidated damages, which liquidated damages the County may deduct from any money due the contractor. As full compensation for the faithful performance of this Contract, the County shall pay the Contractor in accordance with the General Conditions and the unit prices stipulated in the Bid, hereto attached. It is further mutually agreed between the parties hereto that if, at any time after the execution of this Agreement and the Surety Bonds hereto attached for its faithful performance, the County shall deem the surety or sureties upon such bonds to be unsatisfactory, or, if, for any reason, such bonds cease to be adequate to cover the performance of the Work, the Contractor shall, at his expense, within five days after receipt of notice from the County so to do, furnish an additional bond or bonds in such form and amount, and with such surety or sureties as shall be satisfactory to the County. In such event no further payment to the Contractor shall be deemed to be due under this Agreement until such new or additional security for the faithful performance of the Work shall be furnished in manner and form satisfactory to the County.

It is further mutually agreed between the parties hereto that if, at any time after the execution of this Agreement and the Surety Bonds hereto attached for its faithful performance, the County shall deem the surety or sureties upon such bonds to be unsatisfactory, or, if, for any reason, such bonds cease to be adequate to cover the performance of the Work, the Contractor shall, at his expense, within five days after receipt of notice from the County so to do, furnish an additional bond or bonds in such form and amount, and with such surety or sureties as shall be satisfactory to the County. In such event no further payment to the Contractor shall be deemed to be due under this Agreement until such new or additional security for the faithful performance of the Work shall be furnished in manner and form satisfactory to the County.

The Contractor hereby assumes the entire responsibility and liability for any and all injury to or death of any and all persons, including the Contractor's agents, servants, and employees, and in addition thereto, for any and all damages to property caused by or resulting from or arising out of any act or omission in connection with this contract or the prosecution of work hereunder, whether caused by the Contractor or the Contractor's agents, Servants, or employees, or by any of the Contractor's subcontractors or suppliers, and the Contractor shall indemnify and hold harmless the County, the Construction Manager, or any of their subcontractors from and against any and all loss and/or expense which they or any of them may suffer or pay as a result of claims or suits due to, because of, or arising out of any and all such injuries, deaths and/or damage, irrespective of County or Construction Manager negligence (except that no party shall be indemnified for their own sole negligence). The Contractor, if requested, shall assume and defend at the Contractor's own expense, any suit, action or other legal proceedings arising there from, and the Contractor hereby agrees to satisfy, pay, and cause to be discharged of record any judgment which may be rendered against the County and the Construction Manager arising there from.

In the event of any such loss, expense, damage, or injury, or if any claim or demand for damages as heretofore set forth is made against the County or the Construction Manager, the County may withhold from any payment due or thereafter to become due to the Contractor under the terms of this Contract, an

amount sufficient in its judgment to protect and indemnify it and the Construction Manager from any and all claims, expense, loss, damages, or injury; and the County, in its discretion, may require the Contractor to furnish a surety bond satisfactory to the County providing for such protection and indemnity, which bond shall be furnished by the Contractor within five (5) days after written demand has been made therefore. The expense of said Bond shall be borne by the Contractor.

This Contract constitutes the full agreement between the parties, and the Contractor shall not sublet, assign, transfer, pledge, convey, sell or otherwise dispose of the whole or any part of this Contract or his right, title, or interest therein to any person, firm or corporation without the previous consent of the County in writing. Subject to applicable provisions of law, this Contract shall be in full force and effect as a Contract, from the date on which a fully executed and approved counterpart hereof is delivered to the Contractor and shall remain and continue in full force and effect until after the expiration of any guarantee period and the Contractor and his sureties are finally released by the County.

This agreement was approved by the Fulton County Board of Commissioner on [Insert approval date and item number].

[SIGNATURES NEXT PAGE]

IN WITNESS WHEREOF, each of the parties hereto has caused this Contract to be executed and delivered under their **respective seals** on this the:_____

ATTEST: **XXXXXXXXXCONSTRUCTION CO., INC.**

_____ BY: _____

Corporate Secretary Corporate Principal

(CORPORATE SEAL)

ATTEST:

_____ BY: _____

Mark Massey,
County Clerk, Board of Commission

Karen Handel,
Chair, Board of Commissioners

(SEAL)

APPROVED AS TO FORM: **APPROVED AS TO CONTENT:**

_____ BY: _____

County Attorney

Timothy K. Equels,
Assistant Director, Public Works

Note: If the Contractor is a corporation, the Contract shall be signed by the President or Vice President, attested to by the Secretary and the Corporate Seal affixed. If the Contractor is a partnership, the Contract shall be signed in the partnership name by one of the partners, with indication that he or she is a general partner.

Section 7 - BOND REQUIREMENTS

7.1.1 - Bid Bond

No bid for a contract in Fulton County for work to be done shall be valid for any purpose unless the Contractor shall give a Bid Bond with good and sufficient surety payable to, in favor of, and for the protection of Fulton County. The Bid Bond shall be in the amount of not less than 5% of the total amount payable by the terms of the Contract. No bid shall be read aloud or considered if a proper bid bond has not been submitted.

Surety companies executing Bonds must appear on the Treasury Department's most current list (Circular 570 as amended) and be authorized to transact business in the State of Georgia.

Attestation for the corporation must be by the corporate officer; for a partnership by another partner; for an individual by a notary with the corporate seal.

7.1.1 - BID BOND

[PROJECT NUMBER]
[PROJECT TITLE]

FULTON COUNTY GOVERNMENT

KNOW ALL MEN BY THESE PRESENTS, THAT WE_____
_____
hereinafter called the PRINCIPAL, and _____
_____
hereinafter called the SURETY, a corporation chartered and existing under the laws of the State of _____, and duly authorized to transact Surety business in the State of Georgia, are held and firmly bound unto the Fulton County Government, in the penal sum of _____ Dollars and Cents ($_____) good and lawful money of the United States of America, to be paid upon demand of the Fulton County Government, to which payment well and truly to be made we bind ourselves, our heirs, executors, administrators and assigns, jointly and severally and firmly by these presents.

WHEREAS the PRINCIPAL has submitted to the Fulton County Government, for [*insert PROJECT NUMBER AND PROJECT TITLE*,**]** a Bid;

WHEREAS the PRINCIPAL desires to file this Bond in accordance with law;

NOW THEREFORE: The conditions of this obligation are such that if the Bid be accepted, the PRINCIPAL shall within ten (10) calendar days after receipt of written notification from the COUNTY of the award of the Contract execute a Contract in accordance with the Bid and upon the terms, conditions and prices set forth therein, in the form and manner required by the Fulton County Government, and execute sufficient and satisfactory Performance and Payment Bonds payable to the Fulton County Government, each in the amount of one hundred (100%) percent of the total contract price in form and with security satisfactory to said Fulton County Government, then this obligation to be void; otherwise, to be and remain in full force and virtue in law; and the SURETY shall upon failure of the PRINCIPAL to comply with any or all of the foregoing requirements within the time specified above immediately pay to the Fulton County Government, upon demand the amount hereof in good and lawful money of the United States of America, not as a penalty but as liquidated damages.

In the event suit is brought upon this Bond by the COUNTY and judgement is recovered, the SURETY shall pay all costs incurred by the COUNTY in such suit, including attorney's fees to be fixed by the Court.

Enclosed is a Bid Bond in the approved form, in the amount of

_____Dollars

($_____) being in the amount of five (5%) percent of the CONTRACT Sum. The money payable on this bond shall be paid to the Fulton County Government, for the failure of the Bidder to execute a CONTRACT within ten (10) days after receipt of the Contract form and at the same time furnish a Payment Bond and Performance Bond.

IN TESTIMONY THEREOF, the PRINCIPAL and SURETY have caused these presents to be duly signed and sealed this _____ day of _2003.

ATTEST:

_____
PRINCIPAL

_____ BY _____
(SEAL)

CERTIFICATE AS TO CORPORATE PRINCIPAL

I, _____, certify that I am the Secretary of the Corporation named as principal in the within bond; that _____, who signed the said bond of said corporation; that I know this signature, and his/her signature thereto is genuine; and that said bond was duly signed, sealed and attested for in behalf of said Corporation by authority of its governing body.

_____
SECRETARY

(CORPORATE SEAL)

_____
SURETY

_____ BY_____
(SEAL)

7.1.2 - PERFORMANCE BOND REQUIREMENTS

No contract with Fulton County for work to be done shall be valid for any purpose unless the Contractor shall give a Performance Bond with good and sufficient surety payable to, in favor of and for the protection of Fulton County. The Performance Bond shall be in the amount of at 100% of the total contract amount payable by the terms of the Contract and shall be written on the enclosed form.

Surety companies executing Bonds must appear on the Treasury Department's most current list (Circular 570 as amended) and be authorized to transact business as a surety in Georgia.

Attestation for the corporation must be by the corporate officer; for a partnership by another partner; for an individual by a notary with the corporate seal.

7.1.2 - PERFORMANCE BOND

KNOW ALL MEN BY THESE PRESENTS [insert name contractor] (hereinafter called the "Principal") and [insert name of surety] (hereinafter called the "Surety"), are held and firmly bound unto **FULTON COUNTY**, a political subdivision of the State of Georgia (hereinafter called the "Owner") and their successors and assigns, the penal sum of [100% of contract amount], lawful money of the United States of America, for the payment of which the principal and the Surety bind themselves, their administrators, executors, successors and assigns, jointly and severally, firmly by these presents.

WHEREAS, the Principal has entered, or is about to enter, into a certain written contract (Contract) with the Owner, dated _____, which is incorporated herein by reference in its entirety, for the [name of project], more particularly described in the Contract (herein called the "Project"); and

NOW, THEREFORE, the conditions of this obligation are as follows, that if the Principal shall fully and completely perform all the undertakings, covenants, terms, conditions, warranties, and guarantees contained in the Contract, including all modifications, amendments, changes, deletions, additions, and alterations thereto that may hereafter be made, then this obligation shall be void; otherwise it shall remain in full force and effect.

Whenever the Principal shall be, and declared by the Owner to be, in default under the Construction-Type Contract, the Surety shall promptly remedy the default as follows:

1. Complete the Contract in accordance with its terms and conditions; or, at the sole option of the Owner,

2. Obtain a bid or bids for completing the Contract in accordance with its terms and conditions, and upon determination by the Surety and the Owner of the lowest responsible bidder, arrange for a contract between such bidder and Owner and make available as the work progresses (even though there should be a default or succession of defaults under the Contract or contracts of completion arranged under this paragraph) sufficient funds to pay the cost of completion less the balance of the contract price; but not exceeding, including other costs and damages for which the Surety may be liable hereunder, the penal sum set forth in the first paragraph hereof, as may be adjusted, and the Surety shall make available and pay to the Owner the funds required by this Paragraph prior to the payment of the Owner of the balance of the contract price, or any portion thereof. The term "balance of the contract price," as used in this paragraph, shall mean the total amount payable by the Owner to the Contractor under the Contract, and any amendments thereto, less the amount paid by the Owner to the Contractor; or, at the sole option of the Owner,

3. Allow Owner to complete the work and reimburse the Owner for all reasonable costs incurred in completing the work.

In addition to performing as required in the above paragraphs, the Surety shall indemnify and hold harmless the Owner from any and all losses, liability and damages, claims, judgments, liens, costs and fees of every description, including reasonable attorney's fees, litigation costs and expert witness fees, which the Owner may incur, sustain or suffer by reason of the failure or default on the part of the Principal in the performance of any or all of the terms, provisions, and requirements of the Contract, including any and all amendments and modifications thereto, or incurred by the Owner in making good any such failure of performance on the part of the Principal.

The Surety shall commence performance of its obligations and undertakings under this Bond promptly and without delay, after written notice from the Owner to the Surety.

The Surety hereby waives notice of any and all modifications, omissions, additions, changes, alterations, extensions of time, changes in payment terms, and any other amendments in or about the Contract, and agrees that the obligations undertaken by this Bond shall not be impaired in any manner by reason of any such modifications, omissions, additions, changes, alterations, extensions of time, change in payment terms, and amendments.

The Surety hereby agrees that this Bond shall be deemed amended automatically and immediately, without formal or separate amendments hereto, upon any amendment to the Contract, so as to bind the Principal and the Surety to the full and faithful performance of the Contract as so amended or modified, and so as to increase the penal sum to the adjusted Contract Price of the Contract.

No right of action shall accrue on this Bond to or for the use of any person, entity or corporation other than the Owner and any other obligee named herein, or their executors, administrators, successors or assigns.

This Bond is intended to comply with O.C.G.A. Section 36-91-1 et seq., and shall be interpreted so; as to comply with; the minimum requirements thereof. However, in the event the express language of this Bond extends protection to; the Owner beyond that contemplated by O.C.G.A. Section 36-91-1 et seq. and O.C.G.A. Section 13-10-1, as amended, or any other statutory law applicable to this Project, then the additional protection shall be enforced in favor of the Owner, whether or not such protection is found in the applicable statutes.

IN WITNESS WHEREOF the undersigned have caused this instrument to be executed and their respective corporate seals to be affixed and attested by their duly authorized representatives this _____ day of _____, _____.

_____(SEAL)
(Principal)

By:

Attest:

Secretary

_____(SEAL)
(Surety)

By:

Attest:

Secretary

_____
(Address of Surety's Home Office)

_____
(Resident Agent of Surety)

7.1.3 - PAYMENT BOND

No Contract with Fulton County for work to be done shall be valid for any purpose unless the Contractor shall give a Payment Bond with good and sufficient surety payable to Fulton County for the use and protection of all sub-contractors and all persons supplying labor, materials, machinery, and equipment in the prosecution of the work provided for in the Contract. The Payment Bond shall be in the amount of 100% of the total contract amount payable by the terms of the Contract and shall be written on the following form.

Surety companies executing Bonds must appear on the Treasury Department's most current list (Circular 570 as amended) and be authorized to transact business in the State of Georgia.

Attestation for the corporation must be by the corporate officer; for a partnership by another partner; for an individual by a notary with the corporate seal.

7.1.3 - PAYMENT BOND

KNOW ALL MEN BY THESE PRESENTS that [insert name of contractor] (hereinafter called the "Principal") and [insert name of surety] (hereinafter called the "Surety"), are held and firmly bound unto **FULTON COUNTY**, a political subdivision of the State of Georgia (hereinafter called the "Owner"), its successors and assigns as obligee, in the penal sum of [100% of contract amount], lawful money of the United States of America, for the payment of which the Principal and the Surety bind themselves, their administrators, executors, successors and assigns, jointly and severally, firmly by these presents.

WHEREAS, the Principal has entered, or is about to enter, into a certain written contract with the Owner, dated [insert date of contract], which is incorporated herein by reference in its entirety (hereinafter called the "Contract"), for construction-type services of a project known as [insert name of project], as more particularly described in the Contract (hereinafter called the "Project");

NOW, THEREFORE, the condition of this obligation is such that if the Principal shall promptly make payment to all persons working on or supplying labor or materials under the Contract, and any amendments thereto, with regard to labor or materials furnished and used in the Project, and with regard to labor or materials furnished but not so used, then this obligation shall be void; but otherwise it shall remain in full force and effect.

1. A "Claimant " all be defined herein as any subcontractor, person, party, partnership, corporation or the entity furnishing labor, services or materials used, or reasonably required for use, in the performance of the Contract, without regard to whether such labor, services or materials were sold, leased or rented, and without regard to whether such Claimant is or is not in privity of contract with the Principal or any subcontractor performing work on the Project, including, but not limited to, the following labor, services, or materials: water, gas, power, light, heat, oil, gasoline, telephone service or rental of equipment directly applicable to the Contract.

2. In the event a Claimant files a lien against the property of the Owner, and the Principal fails or refuses to satisfy or remove it promptly, the Surety shall satisfy or remove the lien promptly upon written notice from the Owner, either by bond or as otherwise provided in the Contract.

3. The Surety hereby waives notice of any and all modifications, omissions, additions, changes, alterations, extensions of time, changes in the payment terms, and any other amendments in or about the Contract and agrees that the obligations undertaken by this Bond shall not be impaired in any manner by reason of any such modifications, omissions, additions, changes, alterations, extensions of time, changes in payment terms, and amendments.

4. The Surety hereby agrees that this Bond shall be deemed amended automatically and immediately, without formal or separate amendments hereto, upon any amendment or modifications to the Contract, so as to bind the Principal and Surety, jointly and severally, to the full payment of any Claimant under the Contract, as amended or modified, provided only that the Surety shall not be liable for more than the penal sum of the Bond, as specified in the first paragraph hereof.

5. This Bond is made for the use and benefit of all persons, firms, and corporations who or which may furnish any materials or perform any labor for or on account of the construction-type services to be performed or supplied under the Contract, and any amendments thereto, and they and each of them may sue hereon.

6. No action may be maintained on this Bond after one (1) year from the date the last services, labor, or materials were provided under the Contract by the Claimant prosecuting said action.

7. This Bond is intended to comply with O.C.G.A. Section 36-91-1 et seq., and shall be interpreted so as to comply with the minimum requirements thereof. However, in the event the express language of this Bond extends protection to the Owner beyond that contemplated by O.C.G.A. Section 36-91-1 et seq. and O.C.G.A. Section 13-10-1, as amended, or any other statutory law applicable to this Project, then the additional protection shall be enforced in favor of the Owner, whether or not such protection is found in the applicable statutes.

IN WITNESS WHEREOF, the Principal and Surety have hereunto affixed their corporate seals and caused this obligations to be signed by their duly authorized representatives this of _____, _____.

_____(SEAL)
(Principal)

By:

Attest:

Secretary

_____(SEAL)
(Surety)

By:

Attest:

Secretary

_____
(Address of Surety's Home Office)

_____
(Resident Agent of Surety)

SECTION 8 - GENERAL CONDITIONS

INDEX OF SECTION 00500

SUBJECT	GENERAL CONDITION
Administration of Contract	17
Applicable Law	7
Assignment	13
Blasting and Excavation	26
Changes in Work	87, 88
Clean Site	29
Codes	4
Commencement of Work	49
Contract Documents	2
Contractor's Representative	66
Defective Work	31, 32
Definitions	3
Delay	51, 52, 54,55
Extension of Time	52, 53, 54
Familiarity with Site	1, 22
Final Payment	84
Governing Law	86
High Voltage Lines	27
Inclement Weather	53
Indemnification	15
Inspections	23, 61, 62, 68, 69
Interruption	48
Licenses	8
Liquidated Damages	46
New Materials	33, 63
Notices	24
Payment	72, 73 75
Payment of Subcontractors	75, 76
Payment Upon Substantial Completion	82, 84
Payroll Reports	65
Permits	8
Progress Payments	72, 73, 77, 78, 79, 80
Protection of Work	30, 64
Records Inspection	45
Retainage	11, 74
Safety	25
Scaffolding and Staging	28
Scheduling	70
Service of Process	14
Stop Work Order	37
Subcontractors	67, 76
Substantial Completion	81
Suspension	48
Supervision of Work	16, 66
Surety's Responsibility	17
Taxes	9, 10
Termination for Cause	38, 44, 47
Termination for Convenience	39, 40, 41
Time of the Essence	50
Warranties	33, 34, 35, 36
Work Behind Schedule	56

SECTION 8

2006 STANDBY CONSTRUCTION- MISCELLANEOUS WATER SYSTEM SERVICES

GENERAL CONDITIONS

008-1 FAMILIARITY WITH SITE

Execution of this agreement by the Contractor is a representation that the Contractor has visited the site, has become familiar with the local conditions under which the work is to be performed, and has correlated personal observations with the requirements of this agreement. The Contractor shall arrange to drill test pits when necessary.

008-2 CONTRACT DOCUMENTS

This agreement consists of FULTON County's invitation for bid, instructions to bidders, bid form, performance bond, payment bond, acknowledgments, the Agreement, general conditions, special conditions, specifications, plans, drawings, exhibits, addenda, and written change orders.

A. Notice of Award of Contract:

B. Execution of Contract Documents

Upon notification of Award of Contract, the Owner shall furnish the Contractor the conformed copies of Contract Documents for execution by the Contractor and the Contractor's surety.

Within ten (10) days after receipt the Contractor shall return all the documents properly executed by the Contractor and the Contractor's surety. Attached to each document shall be an original power-of-attorney for the person executing the bonds for the surety and certificates of insurance for the required insurance coverage.

After receipt of the documents executed by the Contractor and his surety with the power-of-attorney and certificates of insurance, the Owner shall complete the execution of the documents. Distribution of the completed documents will be made upon completion.

Should the Contractor and/or surety fail to execute the documents within the time specified, the Owner shall have the right to proceed on the Bid Bond accompanying the bid.

If the Owner fails to execute the documents within the time limit specified, the Contractor shall have the right to withdraw the Contractor's bid without penalty.

Drawings and Specifications:

The Drawings, Specifications, Contract Documents, and all supplemental documents, are considered essential parts of the Contract, and requirements occurring in one are as binding as though occurring in all. They are intended to define, describe and provide for all Work necessary to complete the Project in an acceptable manner, ready for use, occupancy, or operation by the Owner.

In case of conflict between the Drawings and Specifications, the Specifications shall govern. Figure dimensions on Drawings shall govern over scale dimensions, and detailed Drawings shall govern over general Drawings.

In cases where products or quantities are omitted from the Specifications, the description and quantities shown on the Drawings shall govern.

Any ambiguities or need for clarification of the Drawings or Specifications shall be immediately reported to the Engineer in writing. Any such ambiguity or need for clarification shall be handled by the Engineer in writing. No

clarification of the Drawings and Specifications hereunder by the Engineer shall entitle the Contractor to any additional monies unless a Change Order has been processed as provided by "Changes in the Contract" hereof.

Any work done by the Contractor following a discovery of such differing site condition or ambiguity or need for clarification in the Contract Drawings and Specifications prior to a written report to the Engineer shall not entitle the Contractor to additional monies and shall be done at the Contractor's risk.

The Engineer will furnish the Contractor five (5) copies of the Contract Drawings and the Specifications, one copy of which the Contractor shall have available at all times on the Project site.

008-3 DEFINITIONS

The following terms as used in this agreement are defined as follows:

Change Order - A written order to the Contractor issued by the County pursuant to Fulton County Procedure 800-6 for changes in the work within the general scope of the contract documents, adjustment of the contract price, extension of the contract time, or reservation of determination of a time extension.

Construction Manager - The Construction Manager is the person or entity identified as such in writing by the County. The Construction Manager may be a County employee or entity retained by the County for purposes of administering this contract. The term “Construction Manager” means the Construction Manager or the Construction Manager’s authorized representative. The Construction Manager is the County’s agent for purposes of administering this contract.

Contract Price - The sum specified in the Agreement to be paid to the Contractor in consideration of the Work.

County - FULTON County, Georgia, a political subdivision of the State of Georgia, acting by and through the Chairman of its Board of Commissioners.

Day - A calendar day of twenty-four hours lasting from midnight of one day to midnight the next day.
Director - Director of the Department of Public Works of FULTON County, Georgia or the designee thereof.

Engineer – Shall be the Director of Public Works or his duly authorized representative.

Notice to Proceed - A written communication issued by the County to the Contractor authorizing it to proceed with the work, establishing the date of commencement and completion of the work, and providing other direction to the Contractor.

Program Manager – Not Used In This Contract. Any provision in reference to this term shall be deleted.

The County has contracted with the Program Manager to provide program planning that establishes direction and performance goals for the implementation of numerous projects contained in the County’s Capital Improvements Program.

Project Manual - The Contract Documents

Substantial Completion - The date certified by the Construction Manager when all or a part of the work, as established pursuant to General Condition 0500-81, is sufficiently completed in accordance with the requirements of the contract documents so that the identified portion of the work can be utilized for the purposes for which it is intended.

Work - All of the services specified, indicated, shown or contemplated by the contract documents, and furnishing by the Contractor of all materials, equipment, labor, methods, processes, construction and manufacturing materials and equipment, tools, plans, supplies, power, water, transportation and other things necessary to complete such services in accordance with the contract documents to insure a functional and complete facility.

008-4 CODES

All codes, specifications, and standards referenced in the contract documents shall be the latest editions, amendments and revisions of such referenced standards in effect as of the date of the Invitation to Bids for this contract.

008-5 REVIEW OF CONTRACT DOCUMENTS

Before making its Bid to the County, and continuously after the execution of the agreement, the Contractor shall carefully study and compare the contract documents and shall at once report to the Construction Manager any error, ambiguity, inconsistency or omission that may be discovered, including any requirement which may be contrary to any law, ordinance, rule, or regulation of any public authority bearing on the performance of the work. By submitting its Bid, the Contractor agrees that the contract documents, along with any supplementary written instructions issued by or through the Construction Manager that have become a part of the contract documents, appear accurate, consistent and complete insofar as can be reasonably determined. If the Contractor has reported in writing any error, inconsistency, or omission to the Construction Manager, has properly stopped the affected work until instructed to proceed, and has otherwise followed the instructions of the Construction Manager, the Contractor shall not be liable to the County for any damage resulting from any such error, inconsistency, or omission in the contract documents. The Contractor shall not perform any portion of the work without the contract documents, approved plans, specifications, products and data, or samples for such portion of the work.

008-6 STRICT COMPLIANCE

No observation, inspection, test or approval of the County or Construction Manager shall relieve the Contractor from its obligation to perform the work in strict conformity with the contract documents except as provided in General Condition 008-48.

008-7 APPLICABLE LAW

All applicable State laws, County ordinances, codes, and rules and regulations of all authorities having jurisdiction over the construction of the project shall apply to this agreement. The Contractor shall comply with the requirements of any Fulton County program concerning non-discrimination in contracting, hereto, and the Fulton County Safety Management Program, as set out in the Contractor Safety and Health Management Process, attached hereto as Exhibit “B”. All work performed within the right of way of the Georgia Department of Transportation and any railroad crossing shall be in accordance with Georgia Department of Transportation regulations, policies and procedures and, where applicable, those of any affected railroad. The Contractor shall comply with all laws, ordinances, codes, rules and regulations bearing on the conduct of the work as specified and the Contractor agrees to indemnify and hold harmless the County, its officers, agents and employees, as well as the Construction Manager against any claim or liability arising from or based on the violation of any law, ordinance, regulation, order or decree affecting the conduct of the work, whether occasioned by the Contractor, his agents or employees.

008-8 PERMITS, LICENSES AND BONDS

All permits and licenses necessary for the work shall be secured and paid for by the Contractor. If any permit, license or certificate expires or is revoked, terminated, or suspended as a result of any action on the part of the Contractor, the Contractor shall not be entitled to additional compensation or time. The Contractor shall obtain and keep in force at all times performance and payment bonds payable to Fulton County in penal amounts equal to 100% of the Contract price.

008-9 TAXES

A. The Contractor shall pay all sales, retail, occupational, service, excise, old age benefit and unemployment compensation taxes, consumer, use and other similar taxes, as well as any other taxes or duties on the materials, equipment, and labor for the work provided by the Contractor which are legally enacted by any municipal, county, state or federal authority, department or agency at the time bids are received, whether or not yet effective. The Contractor shall maintain records pertaining to such taxes and levies as well as payment thereof and shall make the same available to the County at all reasonable times for inspection and copying. The Contractor shall apply

for any and all tax exemptions which may be applicable and shall timely request from the County such documents and information as may be necessary to obtain such tax exemptions. The County shall have no liability to the Contractor for payment of any tax from which it is exempt.

B. The Contractor is obligated to comply with all local and State Sales and Use Tax laws. The Contractor shall provide the Owner with documentation to assist the Owner in obtaining sales and/or use tax refunds for eligible machinery and equipment used for the primary purpose of reducing or eliminating air or water pollution as provided for in Chapter 48-8-3 (36) and (37) of the Official Code of Georgia. All taxes shall be paid by the Contractor. All refunds will accrue to the Owner.

Acceptance of the project as complete and final payment will not be made by the Owner until the Contractor has fully complied with this requirement.

008-10 DELINQUENT CONTRACTORS

The County shall not pay any claim, debt, demand or account whatsoever to any person firm or corporation who is in arrears to the County for taxes. The County shall be entitled to a counterclaim, backcharge, and offset for any such debt in the amount of taxes in arrears, and no assignment or transfer of such debt after the taxes become due shall affect the right of the County to offset any taxes owed against said debt.

008-11 LIEN WAIVERS

The Contractor shall furnish the County with evidence that all persons who have performed work or furnished materials pursuant to this agreement have been paid in full prior to submitting its demand for final payment pursuant to this agreement. A final affidavit, Exhibit D, must be completed, and submitted to comply with requirements of 008-11. In the event that such evidence is not furnished, the County may retain sufficient sums necessary to meet all lawful claims of such laborers and materialmen. The County assumes no obligation nor in any way undertakes to pay such lawful claims from any funds due or that may become due to the Contractor.

008-12 MEASUREMENT

All items of work to be paid for per unit of measurement shall be subject to inspection, measurement, and confirmation by the Construction Manager.

008-13 ASSIGNMENT

The Contractor shall not assign any portion of this agreement or moneys due therefrom (include factoring of receivables) without the prior written consent of the County. The Contractor shall retain personal control and shall provide personal attention to the fulfillment of its obligations pursuant to this agreement. Any assignment without the express written consent of the County shall render this contract voidable at the sole option of the County.

008-14 FOREIGN CONTRACTORS

In the event that the Contractor is a foreign corporation, partnership, or sole proprietorship, the Contractor hereby irrevocably appoints the Secretary of State of Georgia as its agent for service of all legal process for the purpose of this contract only.

008-15 INDEMNIFICATION

The Contractor shall, at his sole cost and expense, indemnify, defend, satisfy all judgments, and hold harmless the County and the Construction Manager and their agents, officers, and employees from and against all claims, damages, actions, judgments, costs, penalties, liabilities, losses and expenses, including, but not limited to, attorney's fees and claims for contribution arising out of or resulting from the performance of the work, provided

that any such claim, damage, action, judgment, cost, penalty, liability, loss or expense (1) is attributable to bodily injury, sickness, disease, or death, or to injury to or destruction of tangible property (other than the work itself) including the loss of use resulting therefrom, and (2) is caused in whole or in part by any act or omission of the Contractor, any subcontractor, anyone directly or indirectly employed by any of them or anyone for whose acts any of them may be liable, regardless whether such claim is caused in part by a party indemnified hereunder. Such obligation shall not be construed to negate, abridge or otherwise reduce any of the rights or obligations of indemnity which would otherwise exist as to any party or person described in this agreement. In any and all claims against the County, the Construction Manager, or any of their officers, agents, or employees by any employee of the Contractor, any subcontractor, anyone directly or indirectly employed by any of them, or anyone for whose acts any of them may be liable, the indemnification obligation contained herein shall not be limited in any way by any limitation on the amount or type of damages, compensation, or benefits payable by or for the Contractor or any subcontractor under Worker's Compensation Acts, disability benefit acts, or other employee benefit acts.

008-16 SUPERVISION OF WORK AND COORDINATION WITH OTHERS

The Contractor shall supervise and direct the work using the Contractor's best skill and attention. The Contractor shall be solely responsible for all construction methods and procedures and shall coordinate all portions of the work pursuant to the contract subject to the overall coordination of the Construction Manager. All work pursuant to this agreement shall be performed in a skillful and workmanlike manner.

The County reserves the right to perform work related to the Project with the County's own forces and to award separate contracts in connection with other portions of the project, other work on the site under these or similar conditions of the contract, or work which has been extracted from the Contractor's work by the County.

When separate contracts are awarded for different portions of the project or other work on the site, the term "separate contractor" in the Contract Documents in each case shall mean the contractor who executes each separate County Agreement.

The Contractor shall cooperate with the County and separate contractors in arranging the introduction and storage of materials and equipment and execution of their work, and shall cooperate in coordinating connection of its work with theirs as required by the Contract Documents.

If any part of the Contractor's Work depends for proper execution or results upon the work of the County or any separate contractor, the Contractor shall, prior to proceeding with that portion of the Work, promptly report to the Construction Manager any apparent discrepancies or defects in such other work that render it unsuitable for such proper execution and results **within fourteen (14) days** of discovery of such discrepancy or defect. Failure of the Contractor to so report in writing shall constitute an acceptance of the County's or separate contractor's work as fit and proper to receive the Work, except as to any defects which may subsequently become apparent in such work by others.

Any costs caused by defective or untimely work shall be borne by the party responsible therefore. Should the Contractor wrongfully cause damage to the work or property of the County, or to other work or property on the site, including the work of separate contractors, the Contractor shall promptly remedy such damage at the Contractor's expense.

Should the Contractor be caused damage by any other contractor on the Project, by reason of such other contractor's failure to perform properly his contract with the County, no action shall lie against the County or the Construction Manager inasmuch as the parties to this agreement are the only beneficiaries hereof and there are no third party beneficiaries and neither the County nor the Construction Manager shall have liabilities therefore, but the Contractor may assert his claim for damages solely against such other contractor. The Contractor shall not be excused from performance of the contract by reason of any dispute as to damages with any other contractor or third party.

Where the Work of this Contract shall be performed concurrently in the same areas as other construction work, the Contractor shall coordinate with the Construction Manager and the separate contractors in establishing

mutually acceptable schedules and procedures that shall permit all jobs to proceed with minimum interference.

If a dispute arises between the Contractor and separate contractors as to their responsibility for cleaning up, the County may clean up and charge the cost thereof to the Contractor or contractors responsible therefor as the County shall determine to be just.

008-17 ADMINISTRATION OF CONTRACT

The Construction Manager shall provide administration services as hereinafter described.

For the administration of this Contract, the Construction Manager shall serve as the County's primary representative during design and construction and until final payment to the Contractor is due. The Construction Manager shall advise and consult with the County . The primary point of contact for the Contractor shall be the Construction Manager. All correspondence from the Contractor to the County shall be forwarded through the Construction Manager. Likewise, all correspondence and instructions to the Contractor shall be forwarded through the Construction Manager.

The Construction Manager will determine in general that the construction is being performed in accordance with design and engineering requirements, and will endeavor to guard the County against defects and deficiencies in the Work.
The Construction Manager will not be responsible for or have control or charge of construction means, methods, techniques, sequences, or procedures, or for safety precautions and programs in connection with the Work, nor will it be responsible for the Contractor's failure to carry out the Work in accordance with the Contract Documents. The Construction Manager will not be responsible for or have control or charge over the acts or omissions of the Contractor, its engineers, consultants, subcontractors, or any of their agents or employees, or any other persons performing the Work.

Based on the Construction Manger's observations regarding the Contractor's Applications for Payment, the Construction Manager shall determine the amounts owing to the Contractor, in accordance with the payment terms of the Contract, and shall issue Certificates for Payment in such amount to the County.

The Construction Manager shall render interpretations necessary for the proper execution or progress of the Work. Either party to the Contract may make written requests to the Construction Manager for such interpretations.

Claims, disputes and other matters in question between the Contractor and the County relating to the progress of the Work or the interpretation of the Contract Documents shall be referred to the Construction Manager for interpretation.

All interpretations of the Construction Manager shall be consistent with the intent of and reasonably inferable from the Contract Documents and shall be in writing or in graphic form.

Except as otherwise provided in this Contract, the Construction Manager shall issue a decision on any disagreement concerning a question of fact arising under this Contract. The Construction Manager shall reduce the decision to writing and mail or otherwise furnish a copy thereof to the Contractor. The decision of the Construction Manager shall be final and conclusive unless, within thirty (30) days from the date of receipt of such copy, the Contractor files a written appeal with the Director of Public Works and mails or otherwise furnishes the Construction Manager a copy of such appeal. The decision of the Director of Public Works or the Director's duly authorized representative for the determination of such appeals shall be final and conclusive. Such final decision shall not be pleaded in any suit involving a question of fact arising under this Contract, provided such is not fraudulent, capricious, arbitrary, so grossly erroneous as necessarily implying bad faith, or is not supported by substantial evidence. In connection with any appeal proceeding under this Article, the Contractor shall be afforded an opportunity to be heard and to offer evidence in support of Contractor's appeal. Pending any final decision of a dispute hereunder, the Contractor shall proceed diligently with the performance of the Contract as directed by the Construction Manager.
The Construction Manager shall have authority to reject Work which does not conform to the Contract Documents. Whenever, in the Construction Manager's opinion, it is considered necessary or advisable for the implementation of the intent of the Contract Documents, the County shall have authority to require special

inspection or testing of the Work whether or not such Work be then fabricated, installed or completed. The Contractor shall pay for such special inspection or testing if the Work so inspected or tested is found not to comply with the requirements of the contract; the County shall pay for special inspection and testing if the Work is found to comply with the contract. Neither the Construction Manager's authority to act under this Subparagraph, nor any decision made by the Construction Manager in good faith either to exercise or not to exercise such authority, shall give rise to any duty or responsibility of the Construction Manager to the Contractor, any subcontractor, any of their agents or employees, or any other person performing any of the Work.

The Contractor shall provide such shop drawings, product data, and samples as may be required by the Construction Manager and/or as required by these Contract Documents.

The Construction Manager shall conduct inspections to determine Substantial Completion and Final Completion, and shall receive and forward to the County for review written warranties and related documents required by the Contract Documents and assembled by the Contractor. The Construction Manager shall approve and issue Certificates for Payment upon compliance with Substantial and Final Completion requirements indicated in General Conditions 008-81, 008-82, 008-84 and 008-85 of this Agreement.

Except as provided in General Condition 008-48, the Contractor shall not be relieved from the Contractor's obligations to perform the work in accordance with the contract documents by the activities or duties of the County or any of its officers, employees, or agents, including inspections, tests or approvals, required or performed pursuant to this agreement.

008-18 RESPONSIBILITY FOR ACTS OF EMPLOYEES

The Contractor shall employ only competent and skilled personnel. The Contractor shall, upon demand from the Construction Manager, immediately remove any superintendent, foreman or workman whom the Construction Manager may consider incompetent or undesirable.

The Contractor shall be responsible to the County for the acts and omissions of its employees, subcontractors, and agents as well as any other persons performing work pursuant to this agreement.

008-19 LABOR, MATERIALS, SUPPLIES, AND EQUIPMENT

Unless otherwise provided in this agreement, the Contractor shall make all arrangements with necessary support agencies and utility companies, provide and pay for all labor, materials, equipment, tools, construction equipment and machinery, water, heat, utilities, transportation, and other facilities and services necessary for the execution and completion of the work.

008-20 DISCIPLINE ON WORK SITE

The Contractor shall enforce strict discipline and good order among its employees and subcontractors at all times during the performance of the work, to include compliance with the Fulton County Drug Free Work Place Policy. The Contractor shall not employ any subcontractor who is not skilled in the task assigned to it. The Construction Manager may, by written notice, require the Contractor to remove from the work any subcontractor or employee deemed by the Construction Manager to be incompetent.

008-21 HOURS OF OPERATION

All work at the construction site, with the exception of emergency repairs, shall be performed during regular business hours of the Fulton County government, except upon the Construction Manager's prior written consent to other work hours. It is further understood that the Contractor's construction schedule is based on a normal 40 hours, five day work week, less Fulton County-recognized holidays. If the Contractor desires to work in excess of this limit, the Contractor shall submit a written request to the Construction Manager, a minimum of five days prior to the desired work date. The Contractor shall be responsible for any additional expenses incurred, unless determined to be emergency work, by the Owner as a result of the extended work hours, including resident inspection overtime at a rate of $41.92 per hour. The cost associated with resident inspector overtime shall be deducted form the Contractor monthly payment request.

008-22 FAMILIARITY WITH WORK CONDITIONS

The Contractor shall take all steps necessary to ascertain the nature and location of the work and the general and local conditions which may affect the work or the cost thereof. The Contractor's failure to fully acquaint itself with the conditions which may affect the work, including, but not limited to conditions relating to transportation, handling, storage of materials, availability of utilities, labor, water, roads, weather, topographic and subsurface conditions, other separate contracts to be entered into by the County relating to the project which may affect the work of the Contractor, applicable provisions of law, and the character and availability of equipment and facilities necessary prior to and during the performance of the work shall not relieve the Contractor of its responsibilities pursuant to this agreement and shall not constitute a basis for an equitable adjustment of the contract terms. The County reserves the right to perform with its own forces or to contract with other entities for other portions of the project work, in which case the Contractor's responsibility to assure its familiarity with work conditions hereunder shall include all coordination with such other contractors and the County necessary to insure that there is no interference between contractors as will delay or hinder any contractor in its prosecution of work on the project. The County assumes no responsibility for any understandings or representations concerning conditions of the work made by any of its officers, agents, or employees prior to the execution of this agreement.

008-23 RIGHT OF ENTRY

The County reserves the right to enter the site of the work by such agent, including the Construction Manager, as it may elect for the purpose of inspecting the work or installing such collateral work as the County may desire. The Contractor shall provide safe facilities for such access so that the County and its agents may perform their functions.

008-24 NOTICES

Any notice, order, instruction, claim or other written communication required pursuant to this agreement shall be deemed to have been delivered or received as follows:

(1) Upon personal delivery to the Contractor, its authorized representative, or the Construction Manager on behalf of the County. Personal delivery may be accomplished by in-person hand delivery or bona fide overnight express service.

(2) Three days after depositing in the United States mail a certified letter addressed to the Contractor or the Construction Manager for the County. For purposes of mailed notices, the County's mailing address shall be 141 Pryor Street, 6th Floor, Atlanta, Georgia 30303, or as the County shall have otherwise notified the Contractor. The Contractor's mailing address shall be the address stated in its Bid or as it shall have most recently notified the Construction Manager in writing.

008-25 SAFETY, EMERGENCIES, SUSPENSION OF WORK

A. The Contractor shall take all reasonable precautions for the safety of all persons and property associated with the work, and the Contractor shall erect and maintain, as required by law or regulation, existing conditions and the progress of the work, all reasonable safeguards for the safety, health, and protection of persons in the vicinity of the project and in accordance with the Fulton County Contractor Safety and Health Management Process (Process). The Process establishes only the minimum safety requirements for the work. Compliance with the Process shall not relieve the Contractor of its obligation to comply with any other requirement of law or regulation or provide a defense against any claim of violation of such other law or regulation. The Contractor is solely responsible for providing a safe and healthy workplace and shall defend, indemnify and hold harmless the County, its officers, employees, agents, and other contractors from any and all losses, claims, penalties, judgments, and expenses, including attorney's fees and legal costs arising in whole or in part from any failure of the Contractor or any of its subcontractors at any tier to comply with the safety and health requirements of this contract. Failure to provide a safe and healthy working place or to follow the safety requirements of this agreement after written notification by the County of such failure is reason for termination of the contract according to the termination provisions herein.

B. In any emergency affecting the safety of persons or property, or in the event of a claimed violation of any federal or state safety or health law or regulation, arising out of or in any way connected with the work or its performance, the Contractor shall act immediately to prevent threatened damage, injury or loss and to

remedy said violation. Failing such action the County or its agent(s) may immediately take whatever steps it deems necessary including, but not limited to, suspending the Work as provided in this agreement. The County or its agent(s) may offset any and all costs or expenses of whatever nature, including attorneys' fees paid or incurred by the County or its agent(s) (whether such fees are for in-house counsel or counsel retained by the County or its agent), in taking the steps authorized by this Condition against any sums then or thereafter due the Contractor. The Contractor shall defend, indemnify and hold harmless the County, its officer, employees, agents, and contractors against any and all costs or expenses caused by or arising from the exercise by the County of its authority to act in an emergency as set out herein.

C. Should, in the judgment of the County or its agent(s), the Contractor or any subcontractor fail to provide a safe and healthy work place or fail to follow the safety requirements defined in the contract documents and approvals, the County or its agent(s) shall have the right, but not the obligation, to suspend work in the unsafe areas until deficiencies are corrected. All costs of any nature (including, without limitation, overtime pay, liquidated damages or other costs arising out of delays) resulting from the suspension, by whomsoever incurred, shall be borne by the Contractor.

D. The Contractor is solely responsible for the implementation of its safety program and the safe provision of its services. The Contractor shall defend, indemnify, and hold harmless the County and its agent(s) from and against any and all liability (whether public or private, penalties (contractual or otherwise), losses, damages, costs, attorneys' fees, expenses, causes of action, claims or judgments resulting, either in whole or in part, from any failure of; the Contractor, its subcontractors at any tier or anyone directly or indirectly employed by any of them or for whose acts any of them may be liable, to comply with the safety requirements of the contract. The Contractor shall not be relieved of its responsibilities under the safety requirements of the Contract the County or its agent(s) act or fail to act pursuant to its rights hereunder. The County and its agents shall not assume, nor be deemed to have assumed, any responsibilities otherwise imposed upon the Contractor by this agreement by virtue of having provided any safety program guidelines. The Contractor shall not raise as a defense to its obligation to indemnify under this Condition any failure of those indemnified hereunder to assure Contractor operates safely, it being understood and agreed that no such failure shall relieve the Contractor from its obligation to assure safe operation or from its obligation to so indemnify. The Contractor also hereby waives any rights it may have to seek contribution, either directly or indirectly from those indemnified hereunder.

E. In any and all claims against those indemnified hereunder by any employee of the Contractor, any subcontractor at any tier or anyone directly or indirectly employed by any of them or anyone for whose acts any of them may be liable, the indemnification obligation under this Condition shall not be limited in any way as to the amount or type of damages, compensation or benefits payable by or for the Contractor or any subcontractor at any tier under any workers' compensation act, disability benefit or other employee benefit acts.

008-26 BLASTING AND EXCAVATION

The Contractor acknowledges that it is fully aware of the contents and requirements of O.C.G.A. § 25-9-1 through 25-9-12 concerning blasting and excavation near underground gas pipes and facilities and shall fully comply therewith.

008-27 HIGH VOLTAGE LINES

The Contractor acknowledges that it is fully aware of the contents and requirements O.C.G.A. § 46-3-30 through 46-3-39 concerning safeguards against contact with high voltage lines, and the Contractor shall fully comply with said provisions.

008-28 SCAFFOLDING AND STAGING

The Contractor acknowledges that it is the person responsible for employing and directing others to perform labor within the meaning of O.C.G.A. § 34-1-1 and agrees to comply with said provisions.

008-29 CLEAN-UP

The Contractor shall clean up all refuse, rubbish, scrap materials, and debris caused by its operations to the end that the site of the work shall present a neat, orderly and workmanlike appearance at all times.

008-30 PROTECTION OF WORK

The Contractor shall be responsible for maintenance and protection of the work, which shall include any County-furnished supplies, material, equipment, until final completion of this agreement and acceptance of the work as defined herein. Any portion of the work suffering injury, damage or loss shall be considered defective and shall be corrected or replaced by the Contractor without additional cost to the County.

008-31 REJECTED WORK

The Contractor shall promptly remove from the project all work rejected by the Construction Manager for failure to comply with the contract documents and the Contractor shall promptly replace and re-execute the work in accordance with the contract documents and without expense to the County. The Contractor shall also bear the expense of making good all work of other Contractors destroyed or damaged by such removal or replacement.

008-32 DEFECTIVE WORK

If the Contractor defaults or neglects to carry out any portion of the work in accordance with the contract documents, and fails within three days after receipt of written notice from the Construction Manager to commence and continue correction of such default or neglect with diligence and promptness, the County may, after three days following receipt by the Contractor of an additional written notice and without prejudice to any other remedy the County may have, make good such deficiencies and complete all or any portion of any work through such means as the County may select, including the use of a separate Contractor. In such case, an appropriate change order shall be issued deducting from the payments then or thereafter due the Contractor the cost of correcting such deficiencies. In the event the payments then or thereafter due the Contractor are not sufficient to cover such amount, the Contractor shall pay the difference to the County on demand.
The County may, at its option, accept defective or nonconforming work instead of requiring its removal or correction. In such case, a change order shall be issued reducing the price due the contractor to the extent appropriate and equitable. Such contract price adjustment shall be effected whether or not final payment has been made.

008-33 WARRANTY OF NEW MATERIALS

The Contractor warrants to the County that all materials and equipment furnished under this contract will be new unless otherwise specified, and the Contractor further warrants that all work will be of good quality, free from faults and defects, and in conformance with the contract documents. The warranty set forth in this paragraph shall survive final acceptance of the work.

008-34 CONTRACTOR'S WARRANTY OF THE WORK

If within one year after the date of issuance of the certificate of final payment pursuant to General Condition 84, or within such longer period of time as may be prescribed by law or by the term of any applicable special warranty required by the contract documents, any of the work is found to be defective or not in accordance with the contract documents, the Contractor shall correct such work promptly after receipt of written notice from the Construction Manager to do so. This obligation shall survive both final payment for the work and termination of the contract.

008-35 ASSIGNMENT OF MANUFACTURERS' WARRANTIES

Without limiting the responsibility or liability of the Contractor pursuant to this agreement, all warranties given by manufacturers on materials or equipment incorporated in the work are hereby assigned by the Contractor to the County. If requested, the Contractor shall execute formal assignments of said manufacturer's warranties to the County. All such warranties shall be directly enforceable by the County.

008-36 WARRANTIES IMPLIED BY LAW

The warranties contained in this agreement, as well as those warranties implied by law, shall be deemed cumulative and shall not be deemed alternative or exclusive. No one or more of the warranties contained herein

shall be deemed to alter or limit any other.

008-37 STOP WORK ORDERS

In the event that the Contractor fails to correct defective work as required by the contract documents or fails to carry out the work in accordance with contract documents, the Construction Manager, in writing, may order the Contractor to stop work until the cause for such order has been eliminated. This right of the County to stop work shall not give rise to any duty on the part of the County or the Construction Manager to execute this right for the benefit of the Contractor or for any other person or entity.

008-38 TERMINATION FOR CAUSE

If the Contractor is adjudged bankrupt, makes a general assignment for the benefit of creditors, suffers the appointment of a receiver on account of its insolvency, fails to supply sufficient properly skilled workers or materials, fails to make prompt payment to subcontractors or materialmen, disregards laws, ordinances, rules, regulations, or orders of any public authority having jurisdiction, fails to diligently prosecute the work, or is otherwise guilty of a material violation of this agreement and fails within seven days after receipt of written notice to commence and continue correction of such default, neglect, or violation with diligence and promptness, the County may, after seven days following receipt by the Contractor and without prejudice to any other remedy the County may have, terminate the employment of the Contractor and take possession of the site as well as all materials, equipment, tools, construction equipment and machinery thereon. The County may finish the work by whatever methods the County deems expedient. In such case, the Contractor shall not be entitled to receive any further payment until the work is completed. If the unpaid balance of the contract price exceeds the cost of completing the work, such excess shall be paid to the Contractor. If such costs exceed the unpaid balance, the Contractor shall pay the difference to the County on demand. This obligation for payment shall survive the termination of the contract. Termination of this agreement pursuant to this paragraph may result in disqualification of the Contractor from bidding on future County contracts.

008-39 TERMINATION FOR CONVENIENCE

The County may, at any time upon 30 days written notice to the Contractor, terminate the whole or any portion of the work for the convenience of the County. Said termination shall be without prejudice to any right or remedy of the County provided herein. In addition, in the event this agreement has been terminated due to the default of the Contractor, and if it is later determined that the Contractor was not in default pursuant to the provisions of this agreement at the time of termination, then such termination shall be considered a termination for convenience pursuant to this paragraph.

008-40 TERMINATION FOR CONVENIENCE - PAYMENT

If the Contract is terminated for convenience by the Owner as provided in this article, Contractor will be paid compensation for those services actually performed as approved by the Owner or his representative. Partially completed tasks will be compensated for based on a signed statement of completion prepared by the Project Manager and submitted to the Contractor which shall itemize each task element and briefly state what work has been completed and what work remains to be done. Contractor shall also be paid for reasonable costs for the orderly filing and closing of the project.

008-41 TERMINATION FOR CONVENIENCE - PAYMENT LIMITATIONS

Except for normal spoilage, and except to the extent that the County shall have otherwise expressly assumed the risk of loss, there shall be excluded from the amounts payable to the Contractor the fair value, as determined by the Construction Manager, of property which is destroyed, lost, stolen or damaged so as to become undeliverable to the County or to another buyer.

008-42 COST TO CURE

If the County terminates for cause the whole or any part of the work pursuant to this agreement, then the County may procure upon such terms and in such manner as the Construction Manager may deem appropriate, supplies or services similar to those so terminated, and the Contractor shall be liable to the County for any excess costs for such similar supplies or services. The Contractor shall continue the performance of this agreement to the extent not terminated hereunder.

008-43 ATTORNEY'S FEES

Should the Contractor default pursuant to any of the provisions of this agreement, the Contractor and its surety shall pay to the County such reasonable attorney's fees as the County may expend as a result thereof and all costs, expenses, and filing fees incidental thereto.

008-44 CONTRACTOR'S RESPONSIBILITIES UPON TERMINATION

After receipt of a notice of termination from the County, and except as otherwise directed by the Construction Manager, the Contractor shall:

(1) Stop work under the contract on the date and to the extent specified in the notice of termination;

(2) Place no further orders or subcontracts for materials, services or facilities, except as may be necessary for completion of such portion of the work under the agreement as is not terminated;

(3) Terminate all orders and subcontracts to the extent that they relate to the performance of work terminated by the notice of termination;

(4) Assign to the County in the manner, at the times, and to the extent directed by the Construction Manager, all of the rights, title and interest of the Contractor under the orders and subcontracts so terminated, in which case the County shall have the right, at its discretion, to settle or pay any and all claims arising out of the termination of such orders or subcontracts;

(5) Settle all outstanding liabilities and all claims arising out of such termination of orders and subcontracts with the approval or ratification of the Construction Manager, to the extent the engineer may require, which approval or ratification shall be final for all purposes;

(6) Transfer title and deliver to the entity or entities designated by the Construction Manager, in the manner, at the times, and to the extent, if any, directed by the Construction Manager, and to the extent specifically produced or specifically acquired by the Contractor for the performance of such portion of the work as has been terminated:

   (a) The fabricated or unfabricated parts, work, and progress, partially completed supplies, and equipment, materials, parts, tools, dyes, jigs, and other fixtures, completed work, supplies, and other material produced as a part of or acquired in connection with the performance of the work terminated by the notice of termination; and

   (b) The completed or partially completed plans, drawings, information, and other property to the work.

(7) Use its best efforts to sell in the manner, at the times, to the extent, and at the prices directed or authorized by the Construction Manager, any property described in Section 6 of this paragraph, provided, however, that the Contractor shall not be required to extend credit to any buyer and further provided that the proceeds of any such transfer or disposition shall be applied in reduction of any payments to be made by the County to the Contractor pursuant to this agreement.

(8) Complete performance of such part of the work as shall not have been terminated by the notice of termination; and

(9) Take such action as may be necessary, or as the Construction Manager may direct, for the protection and preservation of the property related to the agreement which is in the possession of the Contractor and in which the County has or may acquire an interest.

008-45 RECORDS

The Contractor shall preserve and make available to the County all of its records, books, documents and other evidence bearing on the costs and expenses of the Contractor and any subcontractor pursuant to this agreement upon three days advance notice to the Contractor.

008-46 DEDUCTIONS

In arriving at any amount due the Contractor pursuant to the terms of this agreement, there shall be deducted all liquidated damages, advance payments made to the Contractor applicable to the termination portion of the contract, the amount of any claim which the County may have against the Contractor, the amount determined by the Construction Manager to be necessary to protect the County against loss due to outstanding potential liens or claims, and the agreed price of any materials acquired or sold by the Contractor and not otherwise recovered by or credited to the County.

008-47 REIMBURSEMENT OF THE COUNTY

In the event of termination, the Contractor shall refund to the County any amount paid by the County to the Contractor in excess of the costs properly reimbursable to the Contractor.

008-48 SUSPENSION, INTERRUPTION, DELAY, DAMAGES

The Contractor shall be entitled to only those damages and that relief from termination by the County as specifically set forth in this agreement. The Construction Manager may issue a written order requiring the Contractor to suspend, delay or interrupt all or any part of the work for such period of time as the County may determine to be appropriate for the convenience of the County. If the performance of the work is interrupted for an unreasonable period of time by an act of the County or any of its officers, agents, employees, contractors, or consultants in the administration of this agreement, an equitable adjustment shall be made for any increase in the Contractor's costs of performance and any increase in the time required for performance of the work necessarily caused by the unreasonable suspension, delay, or interruption. Any equitable adjustment shall be reduced to writing and shall constitute a modification to this agreement. In no event, however, shall an equitable adjustment be made to the extent that performance of this agreement would have been suspended, delayed or interrupted by any other cause, including the fault or negligence of the Contractor. No claim for an equitable adjustment pursuant to this paragraph shall be permitted before the Contractor shall have notified the Construction Manager in writing of the act or failure to act involved, and no claim shall be allowed unless asserted in writing to the Construction Manager within ten days after the termination of such suspension, delay or interruption.

008-49 COMMENCEMENT AND DURATION OF WORK

The County may issue a Notice to Proceed at any time from the date of Contract execution to the end of the year from when the contract was awarded. The Contractor shall commence work pursuant to this agreement within ten days of mailing or delivery of written notice to proceed. The Contractor shall diligently prosecute the work to completion within the time specified therefor in the Agreement. The capacity of the Contractor's construction and manufacturing equipment and plan, sequence and method of operation and forces employed, including management and supervisory personnel, shall be such as to insure completion of the work within the time specified in the Agreement. The Contractor and County hereby agree that the contract time for completion of the work is reasonable taking into consideration the average climatic conditions prevailing in the locality of the work and anticipated work schedules of other contractors whose activities are in conjunction with or may affect the work under this contract.

008-50 TIME OF THE ESSENCE

All time limits stated in this agreement are of the essence of this contract.

008-51 IMPACT DAMAGES

Except as specifically provided pursuant to a stop work order or change order, the Contractor shall not be entitled to payment or compensation of any kind from the County for direct or indirect or impact damages including, but not limited to, costs of acceleration arising because of delay, disruption, interference or hindrance from any cause whatsoever whether such delay, disruption, interference or hindrance is reasonable or unreasonable, foreseeable or unforeseeable, or avoidable, provided, however, that this provision shall not preclude the recovery of damages by the Contractor for hindrances or delays due solely to fraud or bad faith on the part of the County, its agents, or employees. The Contractor shall be entitled only to extensions in the time required for performance of the work as specifically provided in the contract.

008-52 DELAY

The Contractor may be entitled to an extension of the contract time, but not an increase in the contract price or damages, for delays arising from unforeseeable causes beyond the control and without the fault or negligence of the Contractor or its subcontractors for labor strikes, acts of God, acts of the public enemy, acts of the state, federal or local government in its sovereign capacity, by acts of another separate contractor, or by an act or neglect of the County.

008-53 INCLEMENT WEATHER

The Contractor shall not be entitled to an extension of the contract time due to normal inclement weather. Unless the Contractor can substantiate to the satisfaction of the Construction Manager that there was greater than normal inclement weather and that such greater than normal inclement weather actually delayed the work, the Contractor shall not be entitled to an extension of time therefor. The following shall be considered the normal inclement weather days for each month listed, and extensions of time shall be granted in increments of not less than one half day only for inclement weather in excess of the days set out.

January	10 days
February	10 days
March	7 days
April	6 days
May	4 days
June	3 days
July	4 days
August	2 days
September	2 days
October	3 days
November	6 days
December	9 days

008-54 DELAY, NOTICE AND CLAIM

The Contractor shall not receive an extension of time unless a Notice of Delay is filed with the Construction Manager within ten days of the first instance of such delay, disruption, interference or hindrance and a written Statement of the Claim is filed with the Construction Manager within 20 days of the first such instance. In the event that the Contractor fails to comply with this provision, it waives any claim which it may have for an extension of time pursuant to this agreement.

008-55 STATEMENT OF CLAIM - CONTENTS

The Statement of Claim referenced in the preceding paragraph shall include specific information concerning the nature of the delay, the date of commencement of the delay, the construction activities affected by the delay, the person or organization responsible for the delay, the anticipated extent of the delay, and any recommended action to avoid or minimize the delay.

008-56 WORK BEHIND SCHEDULE, REMEDY BY CONTRACTOR

If the work actually in place falls behind the currently updated and approved schedule, and it becomes apparent from the current schedule that work will not be completed within the contract time, the Contractor agrees that it will, as necessary, or as directed by the Construction Manager, take action at no additional cost to the County to improve the progress of the work, including increasing manpower, increasing the number of working hours per shift or shifts per working day, increasing the amount of equipment at the site, and any other measure reasonably required to complete the work in a timely fashion.

008-57 DILIGENCE

The Contractor's failure to substantially comply with the requirements of the preceding paragraph may be grounds for determination by the County that the Contractor is failing to prosecute the work with such diligence as will insure its completion within the time specified. In such event, the County shall have the right to furnish, from its

own forces or by contract, such additional labor and materials as may be required to comply with the schedule after 48 hours written notice to the Contractor, and the Contractor shall be liable for such costs incurred by the County.

008-58 SET-OFFS

Any monies due to the Contractor pursuant to the preceding paragraph of this agreement may be deducted by the County against monies due from the County to the Contractor.

008-59 REMEDIES CUMULATIVE

The remedies of the County under General Condition 56, 57, and 58 are in addition to and without prejudice to all of the rights and remedies of the County at law, in equity, or contained in this agreement.

008-60 TITLE TO MATERIALS

No materials or supplies shall be purchased by the Contractor or by any Subcontractor subject to any chattel mortgage or under a conditional sales contract or other agreement by which any interest is retained by the seller. The Contractor hereby warrants that it has good and marketable title to all materials and supplies used by it in the work, and the Contractor further warrants that all materials and supplies shall be free from all liens, claims, or encumbrances at the time of incorporation in the work.

008-61 INSPECTION OF MATERIALS

All materials and equipment used in the construction of the project shall be subject to adequate inspection and testing in accordance with accepted standards and in accordance with the requirements of the contract documents. Additional tests performed after the rejection of materials or equipment shall be at the Contractor's expense.

008-62 CONSTRUCTION MANAGER'S PRESENCE DURING TESTING

All tests performed by the Contractor shall be witnessed by the Construction Manager unless the requirement therefore is waived in writing. The Construction Manager may perform additional tests on materials previously tested by the Contractor, and the Contractor shall furnish samples for this purpose as requested.

008-63 MATERIALS INCORPORATED IN WORK

The Contractor shall furnish all materials and equipment to be incorporated in the work. All such materials or equipment shall be new and of the highest quality available. Manufactured materials and equipment shall be obtained from sources which are currently manufacturing such materials, except as otherwise specifically approved by the Construction Manager.

008-64 STORAGE OF MATERIALS

Materials and equipment to be incorporated in the work shall be stored in such a manner as to preserve their quality and fitness for the work and to facilitate inspection.

008-65 PAYROLL REPORTS

The Contractor may be required to furnish payroll reports to the Construction Manager as deemed necessary for the purpose of verification in accordance with the law.

008-66 CONTRACTORS' REPRESENTATIVE

Before beginning work, the Contractor shall notify the Construction Manager in writing of one person within its organization who shall have complete authority to supervise the work, receive orders from the Construction Manager, and represent the Contractor in all matters arising pursuant to this agreement. The Contractor shall not remove its representative without first designating in writing a new representative. The Contractor's representative shall normally be present at or about the site of work while the work is in progress. When neither

the Contractor nor its representative is present at the work site, the superintendent, foreman, or other employee in charge of the work shall be an authorized representative of the Contractor.

008-67 SPECIALTY SUB-CONTRACTORS

The Contractor may utilize the services of specialty subcontractors on those parts of the project which, under normal contracting practices, are performed by specialty subcontractors. The Contractor shall not award more than seventy-five percent of the work to subcontractors.

008-68 INSPECTION BY THE CONSTRUCTION MANAGER

All work pursuant to this agreement shall be subject to inspection by the Construction Manager for conformity with contract drawings and specifications. The Contractor shall give the Construction Manager reasonable advance notice of operations requiring special inspection of a portion of the work.

008-69 WORK COVERED PRIOR TO CONSTRUCTION MANAGER'S INSPECTION

In the event that work is covered or completed without the approval of the Construction Manager, and such approval is required by the specifications or required in advance by the Construction Manager, the Contractor shall bear all costs involved in inspection notwithstanding conformance of such portion of the work to the contract drawings and specifications.

008-70 SCHEDULING OF THE WORK

A. The work of this contract shall be planned, scheduled, executed, and reported using the critical path method (CPM) as established in Section 01310 of these Contract Documents.

B. With ten (10) calendar days after the Notice to Proceed, the Contractor shall submit a Detailed Construction Schedule according to the requirements established herein.

008-71 PROGRESS ESTIMATES

The Contractor shall prepare a written report for the Construction Manager's approval, on County forms, of the total value of work performed and materials and equipment obtained to the date of submission. Such a report must accompany each request for a progress payment and is subject to review and approval by the Construction Manager. Approval of a progress estimate or tendering of a progress payment shall not be considered an approval or acceptance of any work performed, and all estimates and payments shall be subject to correction in subsequent estimates. Progress payments shall be made for all completed activities and for materials suitably stored on-site.

008-72 PROGRESS PAYMENTS

Upon approval of each monthly estimate of work performed and materials furnished, the Construction Manager shall approve payment to the Contractor for the estimated value of such work, materials, and equipment, less the amount of all prior payments and any liquidated damages. The Contractor will be paid 100 percent, less retainage, of the cost of materials received and properly stored on-site but not incorporated into the work. Payments for materials or equipment stored on the site shall be conditioned upon submission by the Contractor of bills of sale to establish the County's title to such materials or equipment. The Contractor's request for payment shall provide sufficient detail as to the work completed or materials purchased for which payment is requested to permit meaningful review by the Construction Manager.

008-73 TIME OF PAYMENT

The Contractor will be paid within 30 days following receipt of an approved Progress Estimate. The Contractor expressly agrees that the payment provisions within this Contract shall supersede the rates of interest, payment periods, and contract and subcontract terms provided for under the Georgia Prompt Pay Act, O.C.G.A. Section 13-11-1 et seq., and that the rates of interest, payment periods, and contract and subcontract terms provided for under the Prompt Pay Act shall have no application to this Contract.

008-74 RETAINAGE

The County shall retain from each progress payment ten percent of the estimated value of the work performed until the progress payments, including retainage, total 50 percent of the contract price. If a contract includes two or more projects or assignments that have been separately priced and have separate budgets, and the performances of such projects or assignments are not related to or dependent upon the performance of any other, the 50 per cent limit shall be based upon the price for each individual project or assignment. Thereafter, no further retainage shall be withheld so long as the Contractor is making satisfactory progress to insure completion of the work within the time specified therefor. The County may reinstate the ten percent retainage in the event the Construction Manager determines that the Contractor is not making satisfactory progress to complete the work within the time specified in this agreement or in the event that the Construction Manager provides a specific cause for such withholding. The County may also withhold retainage upon substantial completion of the work as provided in O.C.G.A. 13-10-20(c). Interest may be paid upon such retainage in accordance with Georgia law.

008-75 PAYMENT OF SUBCONTRACTORS

The Contractor shall promptly pay each subcontractor upon the receipt of payment from the County. Such payment shall be made from the amount paid to the Contractor pursuant to the subcontractor's work. The Contractor shall also maintain the records of the percentage retained from payments to the Contractor pursuant to such subcontractor's work. The Contractor shall procure agreements from each subcontractor requiring each subcontractor to pay their subcontractors, agents and employees
in a similar manner. The County reserves the right to inquire of any subcontractor, supplier, materialman, or subconsultant, the status of any indebtedness of the Contractor. The County further reserves the right to require the Contractor to designate on each instrument of payment exceeding $500.00 to subcontractors, suppliers, materialmen, and subconsultants that such payment is on account of the work under this Contract.

008-76 COUNTY'S RESPONSIBILITIES TO SUBCONTRACTORS

[Neither] the County nor the Construction Manager shall have any obligation to pay any subcontractor except as otherwise required by law.

008-77 PROGRESS PAYMENTS - ACCEPTANCE OF WORK

Certification of progress payments, as well as the actual payment thereof, shall not constitute the County's acceptance of work performed pursuant to this agreement.

008-78 PAYMENTS IN TRUST

All sums paid to the Contractor pursuant to this agreement are hereby declared to constitute trust funds in the hands of the contractor to be applied first to the payment of claims of subcontractors, laborers, and suppliers arising out of the work, to claims for utilities furnished and taxes imposed, and to the payment of premiums on surety and other bonds and on insurance for any other application.

008-79 JOINT PAYMENTS

The County reserves the right to issue any progress payment or final payment by check jointly to the Contractor and any subcontractor or supplier.

008-80 RIGHT TO WITHHOLD PAYMENT

The Construction Manager may decline to approve payment and may withhold payment in whole or in part to the extent reasonable and necessary to protect the County against loss due to defective work, probable or actual third party claims, the Contractor's failure to pay subcontractors or materialmen, reasonable evidence that the work will not be completed within the contract time or contract price or damage to the County or any other contractor on the project.

008-81 CERTIFICATE OF SUBSTANTIAL COMPLETION

Upon the Contractor's submission of a request for a certificate of Substantial Completion, the Construction Manager shall inspect the work and determine whether the work is Substantially Complete. If the work is Substantially Complete, the Construction Manager shall issue a certificate of Substantial Completion of the work which shall establish the date of Substantial Completion, shall state the responsibilities of the County and the Contractor for security, maintenance, heat, utilities, damage to the work and insurance, and shall fix the time within which the Contractor shall complete the items submitted by the Contractor as requiring correction or further work. The certificate of substantial completion of the work shall be submitted to the County and the Contractor for their written acceptance of the responsibilities assigned to them pursuant to such certificate.

If in the sole opinion of the Construction Manager, the work is not substantially complete, the Construction Manager shall notify the Contractor of such, in writing, and outline requirements to be met to achieve Substantial Completion.

008-82 PAYMENT UPON SUBSTANTIAL COMPLETION

Upon Substantial Completion of the work and upon application by the Contractor and approval by the Construction Manager, the County shall make payment reflecting 100% work completed, less value of work remaining as determined by Construction Manager and any authorized retainage.

008-83 COMMENCEMENT OF WARRANTIES

Warranties required by this agreement shall commence on the date of final completion of the project as determined under General Condition 008-84 unless otherwise provided in the certificate of Substantial Completion.

008-84 FINAL PAYMENT - WAIVER OF CLAIMS, DISPUTE OF FINAL PAYMENT

The acceptance of the Substantial Completion payment shall constitute a waiver of all claims by the Contractor except those previously made in writing and identified by the Contractor as unsettled at the time of application for payment at Substantial Completion and except for the retainage sums due at final acceptance. Following the Construction Manager’s issuance of the certificate of Substantial Completion and the Contractor's completion of the work pursuant to this agreement, the Contractor shall forward to the Construction Manager a written notice that the work is ready for final inspection and acceptance. If after inspection the Construction Manager certifies that the work is complete and issues written notification of such to the Contractor, the Contractor shall forward to the Construction Manager a final application for payment. The Construction Manager shall issue a certificate for payment, which shall approve final payment to the Contractor and shall establish the date of final completion.

In the event the Contractor timely disputes the amount of the final payment, the amount due the CONTRACTOR shall be deemed by the CONTRACTOR and the COUNTY to be an unliquidated sum and no interest shall accrue or be payable on the sum finally determined to be due to the CONTRACTOR for any period prior to final determination of such sum, whether such determination be by agreement of the CONTRACTOR and the COUNTY or by final judgment of the proper court in the event of litigation between the COUNTY and the CONTRACTOR. The CONTRACTOR specifically waives and renounces any and all rights it may have under Section 13-6-13 of the Official Code of Georgia and agrees that in the event suit is brought by the CONTRACTOR against the COUNTY for any sum claimed by the CONTRACTOR under the Contract or for any extra or additional work, no interest shall be awarded on any sum found to be due from the COUNTY to the CONTRACTOR in the final judgment entered in such suit. All final judgements shall draw interest at the legal rate, as specified by law.

008-85 DOCUMENTATION OF COMPLETION OF WORK

Neither the final payment nor the remaining retainage shall become due until the Contractor submits the following documents to the Construction Manager:

A. An affidavit that all payrolls, bills for materials and equipment, and other indebtedness connected with the work have been paid other otherwise satisfied;
B. The surety's consent to final payment; and
C. Any other data reasonably required by the County or Construction Manager establishing payment or satisfaction of all such obligations, including releases, waivers of liens, and documents of satisfaction of debts, any deliverables and as-builts of work constructed.

In the event that a subcontractor refuses to furnish a release or waiver as required by the County or Construction Manager, the Contractor may furnish a bond satisfactory to the County to indemnify the County against such loss. In the event that any lien or indebtedness remains unsatisfied after all payments are made, the contractor shall refund to the County all moneys that the County may become compelled to pay in discharging such lien or other indebtedness, including all costs and reasonable attorney's fees.

008-86 GOVERNING LAW

Each and every provision of this agreement shall be construed in accordance with and governed by Georgia law. The parties acknowledge that this contract is executed in FULTON County, Georgia and that the contract is to be performed in FULTON County, Georgia. Each party hereby consents to the FULTON Superior Court's sole jurisdiction over any dispute which arises as a result of the execution or performance of this agreement, and each party hereby waives any and all objections to venue in the FULTON Superior Court.

008-87 CHANGES IN THE WORK

A. CHANGE ORDERS

1. A Change Order is a written order to the Contractor signed to show the approval and the authorization of the County, issued after execution of the Contract, authorizing a change in the Work and/or an adjustment in the Contract Sum or the Contract Time. Change Orders shall be written using forms designated by the County with Contractor providing supporting documentation as required by the Construction Manager. The Contract Sum and the Contract Time may be changed only by approved Change Order pursuant to Fulton County Procedure 800-6. A Change Order signed by the Contractor indicates the Contractor’s agreement therewith, including the adjustment in either or both of the Contract Sum or the Contract Time.

2. The County, without invalidating the Contract, may order changes in the Work within the general scope of the Contract as defined in General Condition 2. The time allowed for performance of the work and the contract price to be paid to the Contractor may be adjusted accordingly.

3. The contractor shall provide an invoice to the Project Manager with 3 competitive vendor labor and material rates. 10% will be allowed as markup to the contractor.

4. The cost or credit to the County resulting from a change in the Work shall be determined in one or more of the following ways:

    a. By mutual acceptance of a lump sum properly itemized and supported by sufficient substantiating data to permit evaluation;

    b. By unit prices stated in the Contract Documents or subsequently agreed upon;

    c. By cost to be determined in a manner agreed upon by the parties and a mutually acceptable fixed or percentage fee; or

    d. By the method provided in Subparagraph A5 below.

5. If none of the methods set forth in Subparagraphs 3a, 3b, or 3c above is agreed upon, the Contractor, provided a written order signed by the Construction Manager is received, shall promptly proceed with the Work involved. The cost of such Work shall then be determined by the Construction Manager on basis of the reasonable expenditures and savings of those performing the Work attributable to the change. The cost of the change shall include only the items listed in Subparagraph 5a below, and in the case of either a decrease or an increase in the Contract Sum, an allowance for overhead and profit in accordance with the schedules set forth in Subparagraphs 5b and 6 below shall be applied to the cost or credit.

    a. In such case, and also under Subparagraph 3a above, the Contractor shall keep and present, in

such form as the Construction Manager may prescribe, an itemized accounting of all actual costs expended, together with appropriate supporting data for inclusion in a Changer Order.

b. All hourly rate charges shall b submitted to the Construction Manager for prior review and approval. All hourly rate charges shall be properly supported as required by the Construction Manager with certified payrolls, or their acceptable equivalent. When authorized to proceed for a given change and actual expenditures have been made prior to execution of a Changer Order for the entire change, such actual expenditures may be summarized monthly, and if approved, incorporated into a Changer Order. When both additions and credits covering related Work or substitutions are involved in any one change, the allowance for overhead and profit shall be figured on the basis of the net increase or decrease, if any, with respect to that change.

6. In Subparagraphs 3 and 4 above, the items included in “Cost and “Overhead” shall be based on the following schedule:

a. Unless otherwise provided in the Contract Documents, “Cost” shall be limited to the following: cost of materials incorporated into the Work, including sales tax and cost of delivery; cost of direct labor (labor cost may include a pro rata share of foreman’s account of the change) including social security, old age and unemployment insurance, and fringe benefits required by agreement or custom; workers’ or workmen’s compensation insurance; rental value of equipment and machinery; costs for preparing Shop Drawings.

b. Unless otherwise provided in the Contract Documents, “Overhead” shall include the following: bond and insurance premiums including increase and decreases from change in the Work, supervision, superintendence, construction parking, wages of timekeepers, watchmen and clerks, small tools, consumable supplies, expendables, incidentals, general office expense, the cost of additional reproduction for the Contractor’s subcontractors beyond that agreed upon in the Contract Documents, construction parking, any additional costs of craft supervision by the Contractor’s or subcontractors’ superintendents, and overhead charges which would be customary and expended regardless of the change in the Work due to other overlapping activities which are included as part of the original Contract, and all other expenses not included in “Cost” above.

c. In the event that a change is issued by the County which would require the expenditure of substantial amounts of special supervision (beyond the foreman level) by the Contractor, the Contractor may, at the sole direction of the Construction Manager, be allowed to incorporate these charges into the agreement cost for the change.

7. In Subparagraphs 3 and 4 above, the allowance for overhead and profit combined, included in the total cost or credit to the County, shall be based on the following schedule:

a. For the Contractor, for any work performed by the Contractor’s own forces, <u>ten (10) percent</u> of the cost.

b. For the Contractor, for any work performed by a Contractor’s subcontractor, ten (10) percent of the amount due the subcontractor.

c. For each subcontractor or sub-subcontractor involved, for any work performed by that subcontractor’s or sub-subcontractor’s own forces, ten (10) percent of the cost.

d. For each subcontractor, for work performed by a sub-subcontractor, five (5) percent of the amount due to the sub-subcontractor.

e. Cost to which overhead and profit is to be applied shall be determined in accordance with Subparagraph 5 above unless modified otherwise.

8. In order to facilitate checking of quotations for extras or credits, all Bids or bids, except those so minor that their propriety can be seen by inspection, shall be accompanied by a complete itemization of costs,

including labor cost, materials and subcontracts. Labor and materials shall be itemized in the manner defined in Subparagraph 4 above. Where major cost items are subcontracts, they shall be itemized also. In no case shall a change be approved without such itemization.

9. No payment shall be made for any changes to the contract that are not included in a fully executed Change Order.

B. CONCEALED, UNKNOWN AND DIFFERING CONDITIONS

Should concealed conditions be encountered in the performance of the Work below the surface of the ground, or should concealed or unknown conditions in an existing structure be at variance with the conditions indicated by the Contract Documents, or should unknown physical conditions below the surface of the ground or concealed or unknown conditions in an existing structure of an unusual nature, differing materially from those ordinarily encountered and generally recognized as inherent in work of the character provided for in this Contract, be encountered, the Contract Sum and Contract Time shall be equitably adjusted by Change Order upon request by either party made **within twenty (20) days after the first observance** of the conditions. No such request for equitable adjustment shall be valid unless the Contractor complies with this (20) days notice and Subparagraph C.1. below.

The Contractor shall promptly, and before such conditions are disturbed, notify the Construction Manager in writing of any claim of concealed, unknown or differing conditions pursuant to this paragraph. The Construction Manager shall authorize the Engineer to investigate the conditions, and if it is found that such conditions do materially so differ and cause an increase or decrease in the Contractor's cost of, or the time required for, performance of any part of the Work under this Contract, whether or not changed as a result of such conditions, an equitable adjustment shall be recommended to the Construction Manager.

No claim of the Contractor under this clause shall be allowed unless the Contractor has given the notice required in (a) above, prior to disturbing the condition.

No claim by the Contractor for an equitable adjustment shall be allowed if asserted after final payment under this Contract.

Any materially differing site condition as between what is shown on the Drawings and Specifications and actually found on site shall be immediately reported to the Construction Manager in writing prior to the commencement of Work at the site. Failure of the Contractor to notify the Construction Manager in writing of the differing site condition prior to performance of Work at the site shall constitute a waiver of any claim for additional monies. Any Change Order necessitated by the differing site condition shall be processed as provided under "Changes in the Contract".

C. REQUESTS FOR ADDITIONAL COST

1. If the Contractor wishes to request an increase in the Contract Sum, the Contractor shall give the Construction Manager written notice thereof **within twenty (20) days** after the occurrence of the event, or identification of the conditions, giving rise to such request. This notice shall be give by the Contractor before proceeding to execute the Work, except in an emergency endangering life or property in which case the Contractor shall proceed in accordance with Paragraph 10.7 of this Agreement, and Subparagraph A.4 above. **No such request shall be valid unless so made within the twenty (20) days specified above**. If the County and the Contractor cannot agree on the amount of the adjustment in the Contract Sum, it shall be determined by the Construction Manager. Any change in the Contract Sum resulting from such claim shall be documented by Change Order.

2. If the Contractor claims that addition cost is involved because of, but not limited to (1) any written interpretation pursuant to General Condition 008-17 of this Agreement, (2) any order by the County to stop the Work pursuant to General Conditions 008-25 and 008-37 of this Agreement where the Contractor was not at fault, or any such order by the Construction Manager as the County's agent, or (3) any written order for a minor change in the Work issued pursuant to Paragraph D below, the Contractor shall submit a request for an increase in the Contract Sum as provided in Subparagraph C.1 above. No such claim shall be valid unless the Contractor complies with Subparagraph C.1 above.

D. MINOR CHANGES IN THE WORK

The Construction Manager may order minor changes in the Work not involving an adjustment in the Contract Price extension of the time allowed for performance of the work and not inconsistent with the intent of the Contract Documents. Such changes shall be effected by a written Change Directive issued by the Construction Manager, and shall be binding on the County and the Contractor. The Contractor shall carry out such written orders promptly.

E. BONDS

If any change order results in an increase in the contract price, the contractor shall increase the penal sum of the performance and payment bonds to equal the increased price.

008-88 DISAGREEMENT WITH ORDERS FOR CHANGE

Contractor's written acceptance of a Change Order or other order for changes shall constitute his final and binding agreement to the provisions thereof and a waiver of all claims in connection therewith, whether direct or consequential in nature. Should Contractor disagree with any order for changes, he may submit a notice of potential claim to the Construction Manager, at such time as the order is set forth in the form of a Change Order. Disagreement with the provisions of an order for changes shall not relieve Contractor of his obligation under Clause 008-87, Change Orders.

008-89 NO WAIVER OF REMEDIES

Exercise by the County of any remedy is not exclusive of any other remedy available to County and shall not constitute a waiver of any such other remedies. Failure of the County to exercise any remedy, including breach of contract remedies, shall not preclude the County from exercising such remedies in similar circumstances in the future.

008-90 LAND AND RIGHTS-OF-WAY

The owner will provide, as indicated in the Contract Documents and prior to Notice to Proceed, the lands upon which the work is to be done, right-of-way for access thereto, and such other lands which are designated for the use of the Contractor. The Contractor shall confine the Contractor's work and all associated activities to the easements and other areas designated for the Contractor's use. The Contractor shall comply with any limits on construction methods and practices which may be required by easement agreements. If, due to some unforeseen reason, the necessary easements are not obtained, the Contractor shall receive an equitable extension of contract time dependent upon the effect on the critical path of the project schedule.

008-91 COORDINATION WITH STATE DEPARTMENT OF TRANSPORTATION

A. No clearing or grading shall be completed by Contractor within the State Department of Transportation (DOT) area under construction. The Contractor must coordinate his construction scheduling with DOT.

B. If the Contractor begins work before DOT's completion date, he must obtain the approval of DOT before starting work in the area. The state DOT has the right to stop the Contractor's work the DOT area.

C. The Contractor shall receive no additional compensation or damages resulting from delay or work stoppage from DOT actions or scheduling.

D. Contractor shall obtain DOT drawings of the DOT, project area for verification of road geometry, storm drains, etc. from Georgia Department of Transportation or Fulton County. The Contractor is responsible for obtaining any pertinent DOT revisions.

END OF SECTION 8

SECTION 9 - SPECIAL CONDITIONS

SECTION 00900

*** 01000 SUMMARY OF WORK**

*** 01010 MEASUREMENT AND PAYMENT OR WATER MAIN CONSTRUCTION**

*** 01020 CONSTRUCTION LAYOUT**

*** 01030 SEE FULTON COUNTY STANDARDS AND SPECIFICATIONS FOR WATER MAIN CONSTRUCTION**

Note: All work performed under this contract shall be in conformance with Fulton County Standards and Specification (Revised August 2005). The proposed bidder should review or obtain a copy of the " Standards and Specification for Water Main Construction" for the Public Works Department before preparing this bid.

SECTION NO. 01000

SUMMARY OF WORK (Water)

1.01 LOCATION

A. The work described by the Specifications is located in Fulton County, Georgia. The exact location will be assigned when individual projects are determined on as-needed basis.

1.02 WORK INCLUDED

A. The work to be done under this Contract consists of the repair, installation and emergency repair of water mains and appurtenances and includes furnishing all materials and equipment and performing all labor necessary to complete the work in accordance with Fulton County Standards and Specifications (Revised August, 2005) and the Contract Documents at various locations throughout Fulton County.

1.03 WORK COORDINATION

A. The Contractor shall coordinate his work with third parties (such as public utilities and telephone company) in areas where such parties may have rights to underground property or facilities, and request maps or other descriptive information as to the nature and location of such underground facilities or property.

B. The Contractor shall also coordinate his work with owners of private and public property where access is required for the performance of the work. Legal access will be acquired and provided by the Owner.

1.04 CONDITIONS AT THE SITES

A. The Contractor shall make all necessary investigations to determine the existence and location of underground utilities.

B. The Contractor will be held responsible for any damage to and for maintenance and protection of existing utilities and structures.

C. Nothing in these Contract Documents or associated Drawings shall be construed as a guarantee that such utilities are in the location indicated or that they actually exist, or that other utilities are not within the area of the operations.

END OF SECTION NO. 01000

SECTION NO. 01010

OCCUPANCY

PART 1 - GENERAL

1.01 PARTIAL OCCUPANCY BY OWNER

A. Whenever, in the opinion of the Owner, any section or portion of the Work is in suitable condition, it may be put into use upon the written order of the Owner and such usage will not be held in any way as an acceptance of said work, or any part thereof, or as a waiver of any of the provisions of these Specifications and the Contract. Pending final completion and acceptance of the Work, all necessary repairs and replacements, due to defective materials or workmanship or operations of the Contractor, for any section of the Work so put into use shall be performed by the Contractor at Contractor's own expense.

END OF SECTION

SECTION 01020

CONSTRUCTION LAYOUT

1.01 DESCRIPTION

A. For this project, the following work is required: furnishing, placing, replacing when required, marking, and maintaining all construction layout stakes necessary for proper guidance and control of construction operations in accordance with the provisions of this specification. It shall also include the preparation of all construction staking field books.

1.02 MATERIALS

A. All surveying equipment, stakes and any other material necessary to perform the work, shall be furnished by the Contractor and shall be approved by the Engineer.

1.03 CONSTRUCTION

A. The Engineer will furnish sufficient reference points from which the project datum can be re-established.

B. The Engineer will furnish benchmarks which will be relocated if necessary and preserved by the Contractor. The Contractor must check these for accuracy after clearing and prior to any construction, and must report any discrepancies which are found to the Engineer. Any additional bench marks which are needed for construction must be established by the Contractor.

C. Any stakes or monuments destroyed or disturbed shall be replaced at the Contractor's expense.

D. All other line and grade stakes necessary to construct the job shall be set by the Contractor.

E. The Contractor shall furnish personnel fully qualified and capable of establishing or re-establishing all line and grade points necessary to complete the work in accordance with plan dimensions and to the tolerance generally acceptable to the degree of precision in surveying required for the work being performed.

F. The Contractor shall furnish a copy of all survey records made by his forces

to the Engineer who reserves the right to check, correct where necessary, or require any layout work to be revised. These records shall be furnished upon request or as they are completed and shall become a part of the permanent project records.

G. Acceptance of all or any part of the Contractor's layout by the Engineer shall not relieve the Contractor of his responsibility to secure proper dimensions in the completed work.

1.04 MEASUREMENT

A. This item will not be measured for payment.

1.05 PAYMENT

A. This work will not be paid for separately. The costs shall be included in other items of work.

END OF SECTION NO. 01020

SECTION 01030
MEASUREMENT AND PAYMENT
(Water Lines)

PART 1 - GENERAL

1.01 PAYMENTS

A. This Section identifies Measurement for Payment outlined in the Proposal (Bid Schedule)) and describes the methods by which payments shall be based.

1.02 NON-PAYMENTS

A. No separate payment shall be made for the restoration of developed property and the cost shall be included in the overall prices for the execution of the work unless specifically noted otherwise.

B. No separate payment shall be made for cutting of concrete and asphalt pavement, excavation, disposal of rubbish and debris, pipe bedding, backfill, dewatering of trench, repair of damaged properties. All testing required for the execution of the work shall be done as part of the price for the item involved.

C. No separate payment shall be made for any traffic control, work area protection, recording, safety measures, set-up of equipment and set-up of staging area except as indicated below. Payment for these items shall be part of the unit price bid for each particular item of work.

D. No separate payment shall be made for providing detail surveys needed for construction. The Owner shall furnish bench marks, reference points and stakes to establish a base line for locating the principal component of the Work. The Contractor shall be responsible in providing further survey necessary to complete the Work. The Contractor shall carefully preserve the established points, and in case of willful or careless destruction, the Contractor shall be responsible for the costs of reestablishing the bench marks, reference points and stakes.

E. The contractor shall allow the owner a minimum of 30 days after the issue of a RFI. No payment shall be made for “down time”.

F. Note: No seprate payment will be made for **Mobilization**. Any cost associated with mobilization are the contractors responsibility and should be included in the individual bid items on for the work performed.

PART 2 - MEASUREMENT AND PAYMENT

2.01 SCOPE

A. The Bid Schedule lists each item of Work for which payment will be made. If a non-listed item of work is required to complete a job prior approval must be obtained in writing from the Project Manager. Where the owner changes the scope to include additional items of work or requires non-listed work items, invoices shall be required to determine the cost of the actual work and a **10% markup** will be added.

B. Required items of work and incidentals necessary for the satisfactory completion of the Work which are not specifically listed in the Bid, and which are not specified in this section to be measured or to be included in one of the items listed in the Bid, shall be considered as incidental to the Work. All costs thereof, including Contractor's overhead costs and profit, shall be considered as included in the lump sum or unit prices bid for the various Bid items. The Contractor shall prepare his Bid accordingly.

C. Work includes furnishing all plant, labor, equipment, tools, and materials, which are not furnished by the Owner, and performing all operations required to complete the Work satisfactorily, in place, as indicated on the Drawings, specified or directed by the Engineer.

2.02 DESCRIPTIONS

A. Measurement of an item of Work will be by the unit indicated in the Bid Schedule.

B. Payment will include all necessary and incidental related work not specified to be included in any other item of Work listed in the Bid Schedule.

C. Unless otherwise stated in individual sections of the Specifications or in the Bid Schedule, no separate payment will be made for any item of Work, materials, parts, equipment, supplies or related items required to perform and complete the Work. The costs for all such items required shall be included in the Contract Price bid of which it is a part.

D. Payment will be made at the Contract Price per unit indicated in the Bid Schedule, with the total price of the Contract being equal to the Total Bid and then summing the extended prices to reflect actual work. Such price and payment shall constitute full compensation to the Contractor for furnishing all plant, labor, equipment, tools, and materials not furnished by the Owner, and for performing all operations required to provide to the Owner the entire Project, complete in place, as specified and as indicated on the Drawings.

E. “Products” shall mean materials or equipment permanently incorporated into the work.

F. “Provide” shall mean furnish and install.

2.03 CLEARING AND GRUBBING

A. Payment for Clearing and Grubbing shall be made for the area cleared and grubbed within the permanent and construction easements limits only, where the area, in the opinion of the Engineer is considered thickly dense with trees and vegetation. The area cleared outside the limits shall not be included unless directed by the Engineer.

B. Clearing and Grubbing shall include removal and disposal off site materials which include all trees, stumps, roots, growth, debris, stumps and other objectionable matter.

C. The cost of moving and reestablishing landscape features within the right-of-way and easements shall be included in the unit prices bid for Watermain.

D. No separate payment will be made for clearing in grass area and in non-established vegetation area within the right-of-way where water line is to be laid. Cost of such work should be included in the unit price bid for Watermain.

2.04 TRENCH EXCAVATION AND BACKFILL

A. No separate payment or additional payment shall be made for any special unique method, means, techniques or equipment necessary for the Contractor’s compliance with these Specifications, regulatory requirements, permits, laws or regulations which govern the project. All costs shall be included in the unit price bid for Watermain.

B. No separate payment shall be made for trench excavation. All costs shall be included in the unit price bid for Watermain.

C. Sheeting, Bracing, and Shoring

1. No separate payment will be made for providing sheeting, bracing, and timbering as specified, shown on the Drawings or necessary due to the Contractor’s means of construction. All costs for sheeting, bracing, and shoring shall be included in the unit price bid for Watermain.

2. No payment will be made for sheeting removed or for sheeting left in place for the Contractor’s convenience.

D. Bedding and Haunching

1. No separate payment will made for material used to provide specified bedding and haunching. The cost of all bedding and haunching materials shall be included in the unit price bid for the item to which it relates except for trench stabilization.

2. No additional payment will be made for improved bedding required to compensate for over excavation of the trench.

3. Additional bedding required to compensate for removed unsuitable materials, as directed by the Engineer will be paid through the unit price bid for Trench Stabilization.

E. Initial Backfill

1. No separate payment shall be made for initial backfill.

2. No separate payment shall be made for drying out the initial backfill material in order to meet the compaction requirements.

3. No separate payment shall be made for the adding of moisture to the initial backfill materials in order to meet compaction requirements.

4. No separate payment shall be made for providing select material if the unsuitable material cannot meet the compaction requirements.

F. Final Backfill

1. No additional payment will be made for additional material.

2. No additional payment will be made for select backfill material. Payment for select material shall be included in the unit price bid for Watermain.

3. No additional payment will be made for disposal off site of surplus excavated materials.

4. No additional payment will be made for placing temporary asphalt, crusher run backfill or granular material on top portion of trench on paved areas. Such cost shall be included as incidental item for constructing watermain.

2.05 ROCK EXCAVATION IN PIPE TRENCHES

A. Rock excavation shall be paid for as an extra addition to payment for

pipe provided for elsewhere in the specifications. Payment will be made for the measured quantity of rock excavated, at the sum of the unit prices bid for Rock Excavation.

B. The maximum allowable volume of rock excavated for payment shall be based on a trench width equal to the outside diameter of the pipe barrel plus eighteen (18) inches, but not less than 36-inches, and depth of rock on the pipe centerline, from the top of the rock to the bottom of the rock or the specified bottom of trench, whichever has the higher elevation.

C. The Owner must be given reasonable notice to measure all rock. Payment shall be made based on a quantity certified correct by the Owner based on a joint measurement conducted by and between the Contractor and the Owner.

D. No allowance shall be made for excavation to the extra width for construction of manholes or other appurtenances, for excavation to sloping sides, or for excavations made necessary by the physical limitations of the Contractor's equipment. Cost of such additional rock excavation shall be included in the unit price bid for the item to which it pertains.

E. If rock is encountered that requires removal by blasting, the Owner will require the Contractor to employ a Blasting Engineer to supervise the Work. The Blasting Engineer must be approved by the Engineer. It will be the Blasting Engineer's duty to advise the blaster of hole spacing and loading and to make seismic and concussion measurements where deemed necessary.

F. No extra payment will be made for blasting. All costs of equipment, labor and materials required for blasting shall be included in the unit price bid for Rock Excavation.

G. Payment for blast monitoring shall be made under the Task Allowances provided for Blast Monitoring. A fee must be agreed upon by the Owner prior to the Contractor employing an independent, qualified specialty subcontractor to monitor the blasting. If the Contractor employs the specialty subcontractor prior to the Owner's approval of the fee, all such costs are subject to non-reimbursement.

2.06 WATERMAIN

A. Payment for Watermain shall be made for the quantity installed. Measurement for payment shall be made along the centerline of the pipe, through valves, fittings, and casings or tunnel. Watermain payment shall include clean-up, testing and disinfection. Payment shall only be made for a section of pipe that has passed the required tests, and the area completely

cleaned-up to the satisfaction of the Engineer.

B. No additional payment will be made for replacement of defective materials.

C. No additional payment will be made to cease flow while connection is made.

D. The cost of soil testing involved in the installation of Watermain will be paid by the Contractor from the Task Allowances for Soil Testing. Any failed tests will not be reimbursed to the contractor from the task allowances.

E Payment for Watermain with restrained joint shall be made for the quantity installed measured in same manner as the regular joint, but based on the unit price bid for Restrained DIP Watermain.

2.07 FITTINGS

A. The unit bid price for Fittings shall include the **fittings, bolts, retainer glands (Megalugs) Hydrant tees and accessories**. Weight shall be AWWA C-110 standard or C-153 compact mechanical joint fittings. The weight shall not include the weight of the bolts and glands. Weight for fittings and anchor couplings shall be Manufacturer's AWWA C-110 or C-153 standard. The Contractor shall submit to the Owner, for the purpose of payment, a list of all fittings along with corresponding weights certified by the Manufacturer.

2.08 VALVES

A. The unit bid price for Valves shall include the cost of providing the valve, valve boxes, valve marker, concrete pad and all related items. Payment shall cover all labor, materials, tools and appurtenances necessary for completion of the work.

2.09 CONNECTION INTO EXISTING WATERMAINS

A. Connection into existing watermains using the "wet tap" method shall be measured for payment at the unit price bid for Tapping Sleeve and Valve Connection to Existing Watermain. Payment shall cover all labor, materials, tools and appurtenances necessary to locate existing mains and make connection of the proposed main to the existing main, including the cost of tapping sleeve and valve. Ductile iron pipe shall be paid for under DIP Watermain and Restrained DIP Watermain. Concrete thrust blocks shall be paid for under Concrete Encasement and Thrust Blocks.

B. Connection into existing watermains using the "cut-in" (perpendicular) method shall be measured for payment at the unit price bid for Cut-In Connection to Existing Watermain. Payment shall cover all labor, materials, tools, and appurtenances necessary to locate existing mains, cut the existing main and make connection of the proposed main to the existing main, and all related items. The cost of fittings used to

make the connection shall be paid for under Fittings. Ductile iron pipe shall be paid for under DIP Watermain and Restrained DIP Watermain. Concrete thrust block shall be paid for under Concrete Encasement and Thrust Blocks. Valve installed shall be paid for under Valves.

C. Connection into existing watermain using the “straight connection” (parallel) method shall be measured for payment at the unit price bid for Straight Connection to Existing Watermain. Payment shall cover all labor, materials, tools, and appurtenances necessary to locate existing mains, remove existing plug and other fittings, cut the existing main and make connection of the proposed main to the existing main, and all related items. The cost of fittings used to make the connection shall be paid for under Fittings. Ductile iron pipe shall be paid for under DIP Watermain and Restrained DIP Watermain. Valves used shall be paid for under Valves. Concrete thrust blocks shall be paid for under Concrete Encasement and Thrust Blocks.

2.10 HYDRANT ASSEMBLY

A. The unit price bid for Fire, Air Release, and Blow-Off Hydrants shall include all labor, material, tools, and appurtenances necessary to install hydrant, sleeve, valve, blocking, 6-in piping and restraining, fittings and gravel, and all related items.

B. No additional payment shall be made for hydrant vertical extension. Payment for hydrant assembly shall be made on the unit price bid regardless of depth of bury.

C Hydrant Tee from the main line shall be paid for separately under the unit cost for Fittings.

2.11 CONCRETE THRUST COLLAR

A. The unit price bid for Concrete Thrust Collar shall include excavation, dewatering, forms, reinforcing bars, welded thrust collar, concrete and all related items to complete the work. Payment shall be based on quantity defined by the limits indicated on the drawings.

B. No additional payment shall be made for excavation and dewatering work.

C. The cost of concrete testing shall be paid for under the Task Allowances for Concrete Testing.

2.13 DEADMAN CONCRETE RESTRAINT

A. The unit price bid for Deadman Concrete Restraint shall include concrete, formworks anchors, rods, straps, fittings and all related items necessary to complete the work, not specifically indicated as a separate item for payment.

B. No additional payment shall be made for excavation and dewatering work.

C. The cost of concrete testing shall be paid for under the Task Allowances for Concrete Testing.

2.14 CONCRETE ENCASEMENT AND THRUST BLOCK

A. The unit price bid for Concrete Encasement and Thrust Blocks shall include concrete and formworks. Payment shall cover all labor, materials, tools necessary to complete the work.

B. No separate payment shall be made for excavation and dewatering work.

C. The cost of concrete testing shall be paid for under the Task Allowances for Concrete Testing.

D. Reinforcing bars installed shall be paid for under separate item.

2.15 BORE AND JACK CASINGS

A. Payment for bore and jack with steel casings of various sizes shall be at the unit price bid per inch per diameter foot for Bore and Jack with Steel Casing and shall include: labor, equipment, casing, supports, grout, and accessories for installing casing and carrier pipe per details. Carrier pipe shall be included in the Jack and Bore bid cost. Measurement for payment shall be made along the centerline of the casing from edge to edge of actual bore. Length of casing protruding outside the actual bored area shall not be included.

B. Payment shall also include excavation and dewatering of access pits and providing sheeting and other safety requirements by OSHA..

C. Payment for carrier pipe shall be included in the unit price bid for water lines. No additional payment shall be made for carrier pipe.

D. In the event that rock is encountered during the installation of pipe casing which, in the opinion of the Engineer, cannot be removed through the casing, the Engineer may authorize the Contractor to complete the crossing by installing a tunnel.

E No additional payment shall be made for rock excavation if some is encountered
during boring and jacking operation.

F Payment for steel casing installed by bore and jack shall be made only at the completion of all work specified for the casing installation.

G Payment for bore and jack without casings of various sizes shall be at the

unit price bid for Bore and Jack without Casing and shall include: labor, equipment, grout, excavation of access pits , dewatering, sheeting and other accessories for complete installation.

2.16 OPEN CUT INSTALLATION WITH STEEL CASING

A. Payment for installing steel casing in an open cut trench shall be made at the unit price bid for Open Cut Installation with Steel Casing, and shall include: labor, equipment, casing, supports, grout and accessories for installing casing and carrier pipe per details, and all other related work necessary for the completion of the work.

B. No additional payment shall be made for excavation, dewatering, shoring and backfilling.

C. Payment for carrier pipe shall be included in the unit price bid for open cut installation with steel casing.

2.17 WATER SERVICE LATERAL CONNECTION

A. The unit price bid for Water Service Connection shall include all labor, equipment, and tools to install copper tubing, tapping saddle, corporation stop, curb stop, meter box, pipe casing, appurtenances and other related items necessary to complete the work as specified or as shown.

B. Additional payment will be made for extra copper tubing in excess of ten feet for short side water service, and fifty feet for long side water service.

C. No additional payment shall be made for excavation work to expose existing main and tapping into existing main.

2.18 UNDERGROUND SAMPLING STATION

A. The unit price for Underground Sampling Station shall include tapping saddle, corporation stop, curb stop, copper tubing, box, sampling rod, valve, appurtenances and the furnishing of all labor, materials, tools necessary to complete the work as specified or as shown.

2.19 REMOVE AND REPLACE DRIVEWAY

A. Payment for removing and replacing driveways shall be made as a separate item based on the measured quantity replaced at the unit price bid for driveway type. The quantity shall be defined by the limits indicated in the Standard Details. The unit price shall include the furnishing of all labor, materials, tools and equipment necessary to complete the work as specified or as shown.

B. Payment for soil, asphalt and concrete testing shall be made from the Task Allowances for Soil, Asphalt and Concrete Testing. No payment shall be made for tests which fail to verify required results.

C. No additional payment will be made for removing and replacing damaged adjacent area of driveway caused by the Contractor.

D. No additional payment shall be made for saw cutting driveways.

2.20 REMOVE AND REPLACE CURB AND GUTTER

A. Payment for removing and replacing curb and gutter shall be made as a separate item based on the measured quantity at the unit price bid for curb and gutter type. The quantity shall be defined by the limits indicated in the Standard Details.

B. Payment for soil, asphalt and concrete testing shall be made from the Task Allowances for Soil, Asphalt and Concrete Testing. No payment shall be made for tests which fail to verify required results.

C. No additional payment will be made for removing and replacing damaged adjacent curb and gutter caused by the Contractor.

D. No additional payment shall be made for saw cutting curb and gutter.

2.21 REMOVE AND REPLACE PAVEMENT

A. Payment for removing and replacing pavements will be made as a separate item based on the measured quantity at the unit price bid for pavement type. The quantity shall be defined by the limits indicated in the Standard Details of the Standard Specifications for Water Main Construction.

B. The unit price for Removing and Replacing Concrete Pavement shall include cutting, removing and disposing existing pavement and replacing and compaction of base, subbase, concrete and all related items, as shown on the Drawings, specified or as directed by the Engineer.

C. The unit price for Removing and Replacing Asphalt Pavement shall include cutting, removing and disposing existing pavement and replacing and compaction of base, subbase, asphalt, concrete and all related items, as shown on the Drawings, specified or as directed by the Engineer. This applies to areas where standard utility cut replacement is not required. Replacement of parking lot shall also be covered under this item.

D. The unit price for FC Standard Utility Cut Replacement shall include cutting, removing and disposing existing pavement, compaction of subbase, concrete base, asphalt courses and all related items, as shown on the Drawings,

specified or as directed by the Engineer.

E. The unit price for Type “E” Asphalt Topping shall include the overlaying of approximately 1.5- inchs of Type “E” asphalt on existing pavement. Areas within utility trenches which require standard utility cut replacement shall be paid separately under the FC Standard Utility Cut Replacement.

F. The unit price for Milling of Existing Asphalt Pavement shall include milling a minimum of 1 inch up to 2-inches thick of existing pavement and disposing of waste materials , and all related items.

G. Payment for soil, asphalt and concrete testing shall be made from the Task Allowances for Soil, Asphalt and Concrete Testing, as directed by the Fulton County Project Manager. No payment shall be made for tests which fail to verify required results.

H. No additional payment will be made for removing and replacing damaged adjacent pavement.

I. For all cuts less than 150 feet in length, temporary asphalt shall be included in the unit cost of Fulton County Standard Utility Cut at no additional cost. For all cuts greater than 150 Ft the concrete cap shall be poured flush with the existing roadway surface **at no additional cost**

2.22 PAVEMENT MARKING AND STRIPING

I. Payment for pavement marking and striping will be made as a separate item based on the measured quantity at the unit price bid for Pavement Marking and Striping.

2.23 REMOVE AND REPLACE CONCRETE SIDEWALK

A. Payment for removing and replacing concrete sidewalk will be made as a separate item based on the measured quantity at the unit price bid for Remove and Replace Concrete Sidewalk.

B. The unit price for removing and replacing concrete sidewalk shall include removal and disposal of existing sidewalk, base, concrete, forms, curing and the furnishing of all labor, materials , tools and appliances, and all related items necessary to complete the work.

C. Payment for soil, asphalt and concrete testing shall be made from the Task Allowances for Soil, Asphalt and Concrete Testing. No payment shall be made for tests which fail to verify required results.

2.24 CAST-IN-PLACE CONCRETE

A. Payment for cast-in-place concrete will be made as a separate item based on measured quantity at the unit price bid for specified strength. This is a separate item from Concrete Thrust Collars, Concrete Encasement, Thrust Blocks, Deadman Concrete and Concrete Pavement. This applies to any concrete work as directed by the Engineer which is not classified under the aforementioned items.

B. The unit price for cast-in-place concrete shall include excavation, dewatering, sheeting and shoring, formworks, concrete, curing and the furnishing of all labor, materials, equipment and tools necessary to complete the work as specified or as shown.

C. Payment for reinforcing bars shall be paid under separate item.

D. Payment for wire mesh shall be paid under a separate item.

E. Payment for soil and concrete testing shall be made shall be made from the Task Allowances for Soil, Asphalt and Concrete Testing. No payment shall be made for tests which fail to verify required results.

2.25 INSTALL NEW STORM WATER PIPE

A. The unit price for installing storm water pipe shall include excavation, dewatering, sheeting and shoring, backfilling, compaction, related items and the furnishing of all labor, materials, equipment and tools necessary to complete the work as specified or as shown.

B. No separate payment will be made for supporting existing storm water pipe when installing watermain crossing over or under storm pipe. Cost for such work should be included in the unit price bid for Watermain.

C. No separate payment will be made for removing and replacing existing storm water pipe for the purpose of ease in construction when installing watermain. Cost of such work should be included in the unit price bid for Watermain.

2.26 GRASSING

A. Payment for temporary grassing shall be paid separately from permanent grassing. Temporary grassing shall be applied to all disturbed area to be left exposed for a period greater than 14 days.

B. The unit price for temporary grassing shall include spreading of fast growing seed, mulching, watering and all related items. No additional payment will be made for maintenance and repairing damaged work.

C. Payment for permanent grassing shall be paid separately. Permanent grassing shall be applied to disturbed area where final grading and dress-up have been completed.

D. The unit price for permanent grassing shall include fine grading of area disturbed, raking, pulverizing soil, removal of rocks, coarse soil and other objectionable materials, fertilizing, seeding, mulching , watering and all related items. No additional payment will be made for maintenance and repairing damaged work.

E. In no case shall one area be paid more than once for temporary and permanent grassing. Where an area is temporarily grassed, which is left permanently, as directed by the Engineer, shall only be paid once for temporary grassing. No additional payment shall be made for permanent grassing in this case.

F. Payment for temporary and permanent grassing will be measured on a linear foot basis along the watermain centerline at the unit price bid for Grassing.

2.27 SODDING

A. Sodding shall be planted as directed by the Engineer. Payment for sodding will be made as a separate item based on measured quantity installed for any type. Unit price shall include preparation of surface to be planted as described in Permanent Grassing, installation of sod, rolling, compacting, watering ,all related items including the furnishing of all labor, materials, equipment and tools necessary to complete the work.

B. No additional payment will be made for maintenance and repairing damaged work.

2.28 SILT FENCE

A. The cost for silt fencing for erosion control purposes, including all materials, labor, equipment and tools, as shown on the Drawings, specified or directed by the Engineer shall be included in the unit price bid for Silt Fence for various types.No additional payment will be made for the cost of maintenance and repair work for damaged work.

B. No additional payment will be made for the cost of removal and disposal of used materials. Removal of silt fence shall be done only when construction area has been completely stabilized with permanent vegetation and all roadways and driveways have been paved and/or as directed by the Engineer.

2.29 STAKED HAYBALES

A. Payment for installing haybales shall be made as a separate item based on actual quantity installed. Installed haybales that do not serve its primary purpose to control erosion will not be paid, unless shown on the Drawings or specified or directed by the Engineer.

B. The unit price for staked haybales shall include installation, maintenance, replacement of damaged unit, disposal and the furnishing of all labor, materials, equipment and tools necessary to complete the work.

2.30 CONSTRUCTION EXIT/ENTRANCE

A. The unit price for installing construction exit/entrance shall include geotextile underliner, stone (NRA R-2 1.5 to 3.5 inches stone), maintenance, repair, disposal and furnishing of all labor, materials, equipment and tools necessary to complete the work.

B. If the action of the vehicle traveling over the gravel pad does not sufficiently remove the mud, the tires should be washed prior to entrance onto public right-of-way. No additional payment will be made for the cost of washing of tires.

C. The construction pad may require periodic top dressing with 1.5 to 3.5 stone, as condition demand as part of maintenance. Such cost should be included in the unit price bid for Construction Exit/Entrance.

D. No. 57 stone is not an acceptable material for construction pad. No additional payment will be made should this material is used for this purpose.

2.31 RIPRAP

A. The cost of all riprap, including filter fabric, shown on the Drawings, specified or directed by the Engineer shall be included in the unit price bid for Riprap . Quantities shall be measure and paid for in square yards.

B. When crossing a stream or ditch, the quantity eligible for payment shall be limited to 10 feet upstream and 10 feet downstream from any disturbed area. Extend filter fabric and riprap from 5 feet from top of bank, across stream bed to 5 feet past the top of the bank. Any other areas at creeks or ditches disturbed by the Contractor, which requires riprap, shall be rip rapped at no additional cost to the Owner.

C. Payment for installed Rock Check Dam, Rock Filter Dam and Rock Channel Stabilization will be made using the unit price bid for Riprap.

2.32 “PIGS-IN-A-BLANKET”

“Pigs-in-a-blanket” are used for inlet sediment trap, as shown on the Drawings, specified or as directed by the Engineer. Payment shall be measured based on quantity installed by linear foot. Unit price shall include fabric, blocks, wires and the furnishing of all labor, materials, equipment and tools necessary for installation, maintenance, and disposal all wastes.

2.33 REPLACE TOP SOIL

A. During clearing of site, lawn sod shall be removed by cutting into maximum size which can be handled without tearing, stripping sod and underlying topsoil, and stockpiling for use in restoring the surface area. The cost of this work will not be made as a separate item but should be included in the unit price bid for Watermain.

B. Payment for top soil shall be made only as directed by the Engineer where in his opinion , the existing surface soil is not viable for grass and vegetative growth. The unit price shall include the removal and disposal of exiting surface soil, importing acceptable top soil, spreading, raking, fine grading and the furnishing of all labor, materials, equipment and tools necessary to complete the

work.

2.34 GABION

A. Payment for gabion shall be made as a separate item from riprap, based on quantity installed as shown on the Drawings, as specified or directed by the Engineer. The unit price shall include the furnishing of stones, reinforcing basket, stakes, excavation, grading, compaction, and all other labor, materials, equipment and tools necessary to complete the work.

2.35 GEOTEXTILE MATTING

A. Geotextile matting or soil stabilization mat are used to establish permanent vegetation on steep slopes, channels, or shorelines.

B. The cost of all materials, labor, equipment and tools to install matting required to established permanent vegetation as shown on the Drawings, specified or directed by the Engineer, shall be included in the unit price bid for Geotextile Matting.

2.36 DIRT BAG

A. Payment for dirt bag shall be made as a separate item based on quantity installed for the purpose of controlling silt during dewatering operation. The unit price shall include the furnishing of non-woven bag, gravel bed, straps, and all other labor, materials, equipment and tools necessary for a complete work.

B. The dirt bag is considered full and should be removed from the site when it is impractical for the bag to filter the sediment out at a reasonable flow rate and should be replaced with a new dirtbag.

C. No additional payment will be made for cleaning, maintenance and disposal of dirtbag.

2.37 TREE PROTECTION

A. Payment for tree protection fence shall be measured based on quantity installed per linear foot. No additional payment will be made for tree protection fence that has been damaged and has to be reestablished due to Contractor's negligence.

2.38 TRAFFIC CONTROL

A. During construction, the work shall be planned and prosecuted so that it can be performed with the least interference to all vehicular and pedestrian traffic. All costs for providing traffic control in compliance with the Manual on Uniform Traffic Control Devices and Georgia DOT Specifications will be borne by the Contractor. Payment for

these items shall be part of the unit price bid for each particular item of work, except for items specifically indicated hereunder as a separate item.

B. Payment for Standard DOT Concrete Barrier shall be based on quantity installed as shown on the Drawings, specified or directed by the Engineer. Concrete barrier shall only be installed, as directed by the Engineer , in open excavation on roadways and other areas where safety is a concern.

C. It is expected that no excavation on roadways will be left open overnight. Therefore, all concrete barriers will be removed from the roadway and moved to a location where vehicular and pedestrian traffic are not obstructed. The cost of moving the barriers shall be included in the unit price bid.

D. The unit price for Concrete Barrier shall also include provision of warning lights when necessary, removal and disposal, maintenance, repair, and furnishing of all labor, materials, equipment and tools necessary to complete the work. Payment shall be based on linear feet of barrier installed per day. No payment will be made for concrete barriers installed that do not serve its purpose.

E. When condition warrants, the Engineer shall require the Contractor to provide additional MUTCD Standard Safety Barrel on site. The Contractor shall be paid for quantity installed per day. However, no additional payment will be made for the costs of providing traffic control devices that are required in compliance with MUTCD as indicated in item 2.38-A above.

F. The Engineer may require the Contractor to provide a Police Cruiser on site to bolster the traffic control in place. The Contractor will be paid based on quantity provided on hourly basis. Payment will be made only for time spent on site.

G. Payment for providing Certified Flagman shall be made as a separate item measured based on quantity of certified flagman provided on hourly basis, as directed by the Engineer. The flagman shall be certified and dedicated only to maintain and direct traffic flow. An individual who works part time as a flagman and laborer or acts in dual capacity will not be considered for payment under this item. Such cost shall be included as part of the unit price bid for the items involved. Also, this may be a percentage of the bid line item based on actual work vs 8 hour day.

H. Proof of certification of flagman may be required by the Engineer prior to performing of any traffic related task.

2.39 TRENCH STABILIZATION

A. Where the subgrade is, by nature, too soft and mucky, in the opinion of the Engineer, for proper installation of pipe, the Engineer may order the Contractor to undercut the ditch and backfill with granular material (crushed stone, #57). The crushed stone shall be brought to grade and compacted. When the unsuitable nature of in-place material arises out of wet trench conditions,

granular material will be authorized only where alternative techniques (including dewatering methods) are impractical as determined by the Engineer.

B. Measurement for payment of Trench Stabilization (crushed stone, #57) will not be made where such material is a part of a required pipe foundation bedding or where such material is used by the Contractor to increase production or utilize a lesser strength pipe when permitted by an improved pipe foundation. Such additional use of granular material in bedding pipe or for other purposes is considered an incidental cost of constructing watermain and no separate payment will be made therefor.

C. When use of granular material is authorized, its volume in cubic yards will be computed by multiplying (1) the horizontal length of the granular material construction along the watermain centerline by (2) the authorized depth of granular material measured at the side of the pipe by (3) the narrowest maximum trench width authorized in the specifications and drawings. If during excavation, the subgrade in-place material under roadway or other paved areas is found unsuitable, in the opinion of the Engineer for proper backfilling of trench and installation of pavement, the Engineer may order the Contractor to remove such material and replace it with trench stabilization material such as suitable earth material (borrow), crusher run or M-10 sand. Where trench stabilization is provided, the trench stabilization material shall be compacted to the requirement of the specifications. However if the excavated material is found suitable but becomes unsuitable later due to improper handling and stockpiling by the Contractor, the Contractor shall be responsible for providing suitable backfill material acceptable to the Engineer.

D. Payment for Trench Stabilization shall be full compensation for removing and disposing the unsuitable material, furnishing trench stabilization material, over-excavation of trench, dewatering, compaction and other related work. Trench Stabilization materials will be measured similar to computing granular material described in item C above.

E. Backfilling the top portion of trench on paved areas temporarily with crusher run or granular material to make the road passable or for other purposes is considered as an incidental cost of constructing watermain, and shall be the responsibility of the Contractor. No separate payment will be made for this work.

F. No additional payment will be made for disposing surplus material offsite.

2.40 REMOVE AND REPLACE EXISTING FENCE

A. Payment of removing and replacing existing fence shall be measured based on quantity removed and replaced for various type of fence. Unit price shall include all labor, material, equipment and tools necessary to complete the work as shown on the Drawings, specified or directed by the Engineer.

2.41 CLEAN-UP, TESTING, AND DISINFECTION

A. All costs for clean-up, testing and disinfection shall be included in the unit price bid for Watermain. Final payment shall not be made for any length of line unless both testing and clean-up have been performed satisfactorily for that length of line for which payment is being requested.

B. Payment for pressure testing and disinfecting, and bacteriological testing shall be made at the unit price bid for Watermain. No separate payment shall be made for associated testing or laboratory fees.

C. The cost of moving and reestablishing man-made and landscape features, including labor, materials and equipment shall be included in the unit price bid for Watermain.

2.42 STREAM CROSSING

A. Payment shall be measured based on a width of flowing water in excess of 6 FT from bottom of bank to bottom of bank and 2FT in depth. This item includes all labor, material, equipment and tools and other incidental items (including dams, pumps etc.) necessary to complete the work as shown on the Drawings, specified or directed by the Engineer.

2.43 TASK ALLOWANCES

A. General

1. The Contractor shall include in the Total Bid all allowances stated in the Contract Documents. The allowances shall cover the net cost of the services provided by a firm selected by the County. The Contractor's handling costs, labor, overhead, profit and other expenses contemplated for the original allowance shall be included in the items to which they pertain and not in allowances.

2. No payment will be made for nonproductive time on the part of testing personnel due to the Contractor's failure to properly coordinate testing activities with the work schedule or the Contractor's problems with maintaining equipment in good working condition.

3. No payment shall be provided for services, which fail to verify required results. The Contractor shall be responsible for payment of failed tests.

B. Should the net cost be more or less than the specified amount of the allowance,

the Contract would be adjusted accordingly by change order. The amount of change order will not recognize any changes in handling costs at the site, labor, overhead, profit and other expenses caused by the adjustment to the allowance.

C. The County's authorized representative shall select a firm, which has a valid standby contract with the County and issue a notice to proceed describing the required services, duration of these services, and the not to exceed amount. Upon notification by the County, the Contractor shall issue a purchase order to the selected firm. The Contractor shall issue the selected firm with conformed contract documents and relevant updates.

D. Documentation

1. Submit copies of the invoices with each periodic payment request from the firm providing the services. Clearly identify project information, date and type of service. Submit invoice back up for all direct expenses.

2. Submit reports documenting the results of services provided which verify compliance with the contract requirements. Schedule of Task Allowances

A. **Soil, Asphalt and Concrete Testing**

Allow the amount provided in the Bid Schedule for the services of a geotechnical engineering firm and testing laboratory to verify soils conditions including trench excavation and backfill, pile bearing resistance, asphalt coring and density tests, testing of concrete cylinders and other similar issues as directed as directed by the Engineer.

B. **Utility Conflict Resolution**

Allow the amount provided in the Bid Schedule to resolve any unforeseen utility conflicts including relocating and/or replacement. Payment for conflicts with existing utilities shall be made only when the watermain can not be routed to avoid the conflict. No payment will be made for any delay or extra cost encountered by the Contractor due to protection, avoidance, or relocation of existing utilities, main or services or changing the horizontal or vertical alignment of the watermain.

C. **Construction Surveying**

Allow the amount provided in the Bid Schedule for construction surveying by an independent surveying firm, selected by the Owner, to perform horizontal and vertical alignment checks at the discretion of the Engineer.

This allowance is solely for the use of the Owner at the Engineer's

recommendation for verification of the Contractor's reference points, centerlines, and work performed. The presence of this allowance in no way relieves the Contractor of the responsibility of installing reference points, centerlines, temporary benchmarks, or verifying that the work has been performed accurately.

No payment shall be made for survey work performed by or for the Contractor in the reestablishment of reference points, benchmarks, including their restoration, as well as centerlines or baseline points.

4. **Blast Monitoring**

Allow the amount provided in the Bid Schedule for the services of an independent, qualified specialty subcontractor to monitor the blasting, when directed by the Engineer. Payment shall be made based on the provisions of item 2.05 (Rock Excavation in Pipe Trenches) above.

END OF SECTION

SECTION 10 – Bid Form/Pricing/Bid Schedule

BID # ITB XXXXXXXXXX
2006 STANDBY CONSTRUCTION – MISCELLANEOUS WATER SYSTEM SERVICES

TO THE BOARD OF COMMISSIONERS, FULTON COUNTY, GEORGIA

Submitted _____, 200___

The undersigned, as Bidder, hereby declares that the only person or persons interested in the Bid as principal or principals is or are named herein and that no other person than herein mentioned has any interest in this Bid or in the Contract to be entered into; that this Bid is made without connection with any other person, company or parties making a bid or Bid; and that it is in all respects fair and in good faith without collusion or fraud.

The Bidder if selected will work diligently to provide construction services as needed on individually assigned Water Main Construction projects. The selected contractor will perform all work and adhere to Fulton County drawings, specifications, general conditions and will furnish all related contact documents as requested by Fulton County. Specifications for the work and contractual documents relative thereto, and has read all instructions to Bidders and General Conditions furnished prior to the openings of bids; that he has satisfied himself relative to the work to be performed.

The Bidder proposes and agrees, if this Bid is accepted, to contract with the Board of Commissioners of Fulton County, Atlanta, Georgia, in the form of contact specified, to furnish all necessary materials, equipment, machinery, tools, apparatus, means of transportation and labor necessary, and to complete the construction of the work in full and complete accordance with the shown, noted, and reasonably intended requirements of the Specifications and Contract Documents to the full and entire satisfaction of the Board of Commissioners of Fulton County, Atlanta, Georgia, with a definite understanding that no money will be allowed for extra work except as set forth in the attached General Conditions and Contract Documents for the following prices.

The Bidder agrees hereby to commence work under this Contract, with adequate personnel and equipment on a date to be specified in a written order (Notice to Proceed) by the Owner and to fully complete all work under this Contract within the allotted time specified in the individual projects Notice to Proceed. Failure to work diligently on assigned projects and to complete assigned work in the allotted time could result in liquidated damages in the amount of **$1000.00 per** calendar day the work is not completed.

The Bidder declares that he understands that the unit price quantities submitted in the bid are fixed unit price items and shall not be subject to any increase for the duration of this contract. Payment for work will be based on the actual work and quantities used in relation to the unit price provided by the bidder. Quantities for the unit price items are subject to either increase or decrease, and should the quantities of any of the items of work be increased, the Bidder proposes to do the additional work at the unit prices stated herein; and should the quantities be decreased, the Bidder also understands that payment will be

made on the basis of actual quantities of the unit price bid and will make no claim for anticipated profits for any decrease in quantities; and that actual quantities will be determined upon completion of work, at which time adjustments will be made to the contract amount by direct increase or decrease.

The Bidder furthermore agrees that, in the case of a failure on his part to execute the Contract Agreement and Bonds within ten days after receipt of conformed contract documents for execution, the Bid Bond accompanying his bid and the monies payable thereon shall be paid into the funds of the Owner as liquidated damages for such failure.

Bidder acknowledges receipt of Addenda:

_____

_____

_____

BIDDER: _____

Signed by: _____
[Type or Print Name]

Title: _____

Business Address: _____

_____

Business Phone: _____

Bidder's Contractor License No: _____
[State/County]

License Expiration Date: _____

Enclosed is a Bid Bond in the approved form, in the sum of:

_____Dollars

($_____) according to the conditions of "Instructions to Bidders" and provisions thereof.

SCOPE OF WORK AND BID PRICE

This work will consist of furnishing all materials, equipments and performing all labor necessary for the construction, installation, and emergency repair of miscellaneous water mains, water service lines, and required improvements to the water distribution system within Fulton County. The Work includes providing an emergency water main repair crew on an as needed basis. All work shall be in conformance with the contract documents, general conditions, special conditions, any accompanying plans and Fulton County Construction Standards and Specifications (Revised August, 2005). Being this is a miscellaneous standby contract; the location of the work will be in various locations through out Fulton County. Projects will be assigned by issuance of a Notice to Proceed for that individual project.

Note: No separate Payment will be made for Mobilization in this contract. Mobilization costs are the responsibility of the selected contractor.

The term of this Contract shall be 365 consecutive calendar days from the date of award by the Fulton County Board of Commissioners. The selected vendor(s) shall be issued work by a written/signed Notice to Proceed for individually assigned projects. Work shall begin no later than 10 days from the issuance of a Notice to Proceed. Fulton County reserves the right to renew this contract for one (1) additional 365 consecutive calendar day period pending availability of funding, contractor compliance with county rules and policies, satisfactory work performance by the contractor and Board of Commissioners approval. Option year prices shall be maintained at the rates approved in the initial contract term. Fulton County reserves the right to award this contract to one or more qualified vendors

4.1 BID SCHEDULE FOR THE 2006 STANDBY MISCELLANEOUS WATER SYSTEM SERVICES CONTRACT

SUBMITTED BID PRICING SHEET FOR:_____

	DESCRIPTION	QTY.	UNIT COST	AMOUNT
1.	DIP WATERMAIN WITH TYPE 3 BEDDING: *All water lines shall be tested a minimum of 250 psi for 2 hours.			
A	6-IN DIAMETER	100 LF	$	$
B	8-IN DIAMETER	2,000 LF	$	$
C	10-IN DIAMETER	2,000 LF	$	$
D	12-IN DIAMETER	2,000 LF	$	$
E	16-IN DIAMETER	500 LF	$	$
2.	RESTRAINED JOINT DIP WATERMAIN WITH TYPE 3 BEDDING * Water lines shall be tested for 250 psi for 2 hours.			
A	6-IN DIAMETER	100 LF	$	$
B	8-IN DIAMETER	1,000 LF	$	$
C	10-IN DIAMETER	1000 LF	$	$
D	12-IN DIAMETER	500 LF	$	$
E	16-IN DIAMETER	100 LF	$	$
3.	DUCTILE IRON FITTINGS (Includes Megalugs and hydrant tees) (See section 9-01150-5)			
A	RESTRAINED DUCTILE IRON FITTINGS	50 TNS	$	$
4.	BUTTERFLY VALVES * Valves will be tested at 250 psi for 2 hours			
A	10-IN DIAMETER	10 EA	$	$
B	12-IN DIAMETER	10 EA	$	$
C	16-IN DIAMETER	10 EA	$	$
5.	GATE VALVES * Valves will be tested at 250 psi for 2 hours			
A	8-IN DIAMETER	20 EA	$	$
B	10-IN DIAMETER	10 EA	$	$
C	12-IN DIAMETER	10 EA	$	$

SUBMITTED BID PRICING SHEET FOR:_____

	DESCRIPTION	QTY.	UNIT COST	AMOUNT
6.	TAPPING SLEEVE AND VALVE CONNECTION TO EXISTING WATER MAIN			
A	8-IN X 8-IN	10 EA	$	$
B	10-IN X 8-IN	10 EA	$	$
C	10-IN X 10-IN	10 EA	$	$
D	12-IN X 8-IN	1 EA	$	$
E	12-IN X 10-IN	1 EA	$	$
F	12-IN X 12-IN	1 EA	$	$
G	16-IN X 8-IN	1 EA	$	$
H	16-IN X 10-IN	1 EA	$	$
I	16-IN X 12-IN	1 EA	$	$
J	16-IN X 16-IN	1 EA	$	$
7.	HYDRANT ASSEMBLY (FIRE, AIR RELEASE AND BLOW-OFF TYPES) Assembly includes- hydrant, sleeve, valve, blocking, fittings, anchor coupling, extensions, connection pipe and gravel.			
A	HYDRANT ASSEMBLY	40 EA	$	$
8.	CONCRETE THRUST COLLARS FOR SPECIFIED PIPE			
A	8-IN to 12-IN DIAMETER	10 EA	$	$
B	16-IN to 24-IN DIAMETER	5 EA	$	$
9.	DEADMAN CONCRETE RESTRAINT FOR SPECIFIED PIPE			
A	8-IN to 10-IN DIAMETER	1 EA	$	$
B	12-IN to 16-IN DIAMETER	1 EA	$	$
10.	CONCRETE ENCASEMENT OR THRUST BLOCK			
A	CONCRETE ENCASEMENT/THRUST BLOCK	80CY	$	$
11.	BORE AND JACK WITH STEEL CASING * Note: Carrier Pipe, spacers and grout are to be included in the bore cost.			
A	0.25-IN WALL THICKNESS			

SUBMITTED BID PRICING SHEET FOR: :_____

	DESCRIPTION	QTY.	UNIT COST	AMOUNT
1	12" DIAMETER CASING	200 LF	$	$
2	16"DIAMETER CASING	200LF	$	$
3	18" DIAMETER CASING	200LF	$	$
B	0.375-IN WALL THICKNESS			
1	24" DIAMETER CASING	100 LF	$	$
12.	BORE AND JACK WITHOUT CASING (FREEBORE) FOR SPECIFIED PIPE (Grout Included)			
A	8-IN DIAMETER	200 LF	$	$
B	10-IN DIAMETER	200 LF	$	$
C	12-IN DIAMETER	200 LF	$	$
D	16-IN DIAMETER	100 LF	$	$
13.	OPEN CUT INSTALLATION WITH STEEL CASING) * Note: Carrier Pipe is to be included			
A	0.25-IN WALL THICKNESS		$	$
1	12" DIAMETER CASING	200 LF	$	$
2	16"DIAMETER CASING	150LF	$	$
3	18" DIAMETER CASING	150LF	$	$
B	0.375-IN WALL THICKNESS		$	$
1	24" DIAMETER CASING	100 LF	$	$
14.	CUT-IN (PERPENDICULAR) CONNECTION TO EXISTING WATERMAIN			
A	8-IN DIAMETER	10 EA	$	$
B	10-IN DIAMETER	10 EA	$	$
C	12-IN DIAMETER	10 EA	$	$
D	16-IN DIAMETER	5 EA	$	$
E	18-IN DIAMETER	5 EA	$	$
15.	STRAIGHT (PARALLEL) CONNECTION TO EXISTING WATERMAIN			
A	8-IN DIAMETER	10 EA	$	$

SUBMITTED BID PRICING SHEET FOR: :_____

	DESCRIPTION	QTY.	UNIT COST	AMOUNT
B	10-IN DIAMETER	10 EA	$	$
C	12-IN DIAMETER	10 EA	$	$
D	16-IN DIAMETER	5 EA	$	$
E	18-IN DIAMETER	1 EA	$	$
16.	WATER SERVICE CONNECTION (INCLUDE COPPER TUBING, SERVICE CONNECTION, CORPORATION STOP, CURB STOP, APPURTENANCES AND RELATED WORK)			
A	1-IN SHORT SIDE (UP TO 10LF OF TUBING)	100 EA	$	$
B	1-IN LONG SIDE (UP TO 50LF OF TUBING)	100 EA	$	$
C	¾-IN SHORT SIDE (UP TO 10LF OF TUBING	20 EA	$	$
D	¾-IN LONG SIDE (UP TO 50LF OF TUBING)	20 EA	$	$
E	1-IN COPPER TUBING (IN EXCESS OF ABOVE)	100 LF	$	$
F	¾-IN COPPER TUBING (IN EXCESS OF ABOVE)	100 LF	$	$
17.	¾ –IN UNDERGROUND SAMPLING STATION			
A	¾-IN UNDERGROUND SAMPLING STATION (Tap Box and Valve)	10 EA	$	$
18.	RELOCATE METER ASSEMBLY AND VAULT			
A	3-IN DIAMETER	10 EA	$	$
B	4-IN DIAMETER	10 EA	$	$
C	6-IN DIAMETER	10 EA	$	$
19.	FURNISH AND INSTALL COMPLETE METER WITH BACKFLOW PREVENTER ASSEMBLY			
A	3-IN DIAMETER	10 EA	$	$
B	4-IN DIAMETER	10 EA	$	$
C	6-IN DIAMETER	10 EA	$	$
20.	REMOVE AND REPLACE DRIVEWAY			
A	CONCRETE DRIVEWAY	1000 SY	$	$

SUBMITTED BID PRICING SHEET FOR: :_____

	DESCRIPTION	QTY.	UNIT COST	AMOUNT
B	ASPHALT DRIVEWAY	1000 SY	$	$
C	BRICK DRIVEWAY	20 SY	$	$
D	DECORATIVE PAVER	20 SY	$	$
E	GRAVEL DRIVEWAY	100 SY	$	$
21.	REMOVE AND REPLACE CURB AND GUTTER			
A	CONCRETE CURB AND GUTTER	1000 LF	$	$
B	CONCRETE CURB	1000 LF	$	$
C	GRANITE CURB	50 LF	$	$
D	ASPHALT CURB	50 LF	$	$
22.	REMOVE AND REPLACE PAVEMENT			
A	CONCRETE PAVEMENT	100 SY	$	$
B	ASPHALT PAVEMENT	100 SY	$	$
C	FC STD. UTILITY CUT PAVEMENT 10” Concrete Cap, 2”TypeE Asphalt Top	1000 SY	$	$
D	1.5-IN TYPE “E” ASPHALT TOPPING	2000 SY	$	$
E	MILLING OF EXISTING ASPHALT	1000 SY	$	$
23.	PAVEMENT MARKING AND STRIPING			
A	4-IN STD. DOT YELLOW STRIPING (Thermoplastic)	100 LF	$	$
B	4-IN STD. DOT YELLOW STRIPING (Paint)	100 LF	$	$
E	STD. DOT STOP BAR (Thermoplastic)	50 EA	$	$
F	STD. DOT STOP BAR (Paint)	50 EA	$	$
24.	REMOVE AND REPLACE CONCRETE SIDEWALK			
A	REMOVE & REPLACE CONCRETE SIDEWALK	1000 SY	$	$
25.	CAST IN PLACE CONCRETE			

SUBMITTED BID PRICING SHEET FOR: :_____

	DESCRIPTION	QTY.	UNIT COST	AMOUNT
A	4000 PSI COMPRESSIVE STRENGTH	500 CY	$	$
B	REINFORCING BAR	2000 LBS	$	$
C	WIRE MESH FOR CONCRETE REPLACEMENT	10 SY	$	$
26.	INSTALL NEW STORM WATER PIPE			
B	12-IN RCP	10 LF	$	$
C	18-IN RCP	10 LF	$	$
D	24-IN RCP	10 LF	$	$
F	12-IN CMP	10 LF	$	$
G	18-IN CMP	10 LF	$	$
H	24-IN CMP	10 LF	$	$
27.	EROSION AND SEDIMENT CONTROL			
A	TEMPORARY GRASSING	6,000 LF	$	$
B	PERMANENT GRASSING	6,000 LF	$	$
C	SODDING (ALL TYPES)	5000 SY	$	$
D	TYPE “A” SILT FENCE	2,000 LF	$	$
E	TYPE “B” SILT FENCE	3,000 LF	$	$
F	TYPE “C” SILT FENCE	3,000 LF	$	$
G	HAYBALES	500 EA	$	$
H	CONSTRUCTION ENTRANCE/EXIT	20 EA	$	$
I	RIPRAP	300 CY	$	$

SUBMITTED BID PRICING SHEET FOR: :_____

	DESCRIPTION	QTY.	UNIT COST	AMOUNT
J	"PIGS IN A BLANKET"	100 LF	$	$
K	REPLACE TOP SOIL	300 SY	$	$
L	GABION	15 CY	$	$
M	GEOTEXTILE MATTING	1000 SY	$	$
N	DIRT BAGS (SILT CONTROL PUMPIN(SYSTEM)	1 EA	$	$
28.	TREE PROTECTION			
A	TREE PROTECTION FENCE (ACTIVE)	5,000 LF	$	$
B	TREE PROTECTION TAPE (PASSIVE)	1,000 LF	$	$
29.	TRAFFIC CONTROL			
A	STANDARD DOT CONCRETE BARRIER	EA PER DAY	$	$
B	MUTCD STANDARD SAFETY BARREL	10 EA/DAY	$	$
C	POLICE CRUISER	1 EA/DAY	$	$
D	CERTIFIED FLAGMAN	2 MAN/DAY	$	$
30.	CLEARING AND GRUBBING			
A	CLEARING & GRUBBING	15 AC	$	$
31.	ROCK EXCAVATION: Rock excavation will be determined and verified by an assigned Fulton County Engineer. Rock will not be paid for unless verified. (Section 01150-4)			
A	EXCAVATION AND REMOVAL OF ROCK	500 CY	$	$
32.	TRENCH STABILIZATION			

SUBMITTED BID PRICING SHEET FOR: :_____

	DESCRIPTION	QTY.	UNIT COST	AMOUNT
A	SUITABLE EARTH MATERIALS (BORROW)	500 CY	$	$
B	CRUSHER RUN	1,000 CY	$	$
C	CRUSHER STONE, #57	1000 CY	$	$
D	M-10 SAND	100 CY	$	$
33.	REMOVE AND PEPLACE EXISTING FENCE			
A	4-FT HIGH CHAIN LINK	100 LF	$	$
B	6-FT HIGH CHAIN LINK FENCE	100 LF	$	$
C	4-FT HIGH WOOD FENCE	100 LF	$	$
D	6-FT HIGH WOOD FENCE	100 LF	$	$
34.	STREAM CROSSING – To be measured from bottom of bank, side to side, with flowing water greater than 6ft wide and 2ft deep. Includes dam, pumps, gravel and labor.			
A	6 Ft WIDE, 2Ft DEEP OR GREATER STREAM CROSSING	10 each	$	$
35.	3M LOCATOR MARKERS (- PROGRAMMABLE ELECTRONIC WATER LINE MARKING DEVICE 3M 1423-XR-ID (or comparable)			
A	ELECTRONIC WATER LINE MARKER BALLS	500 each	$	$
36.	TASK ALLOWANCES- WORK TO BE DETERMINED BY A FULTON COUNTY REPRESENTATIVE			
A	UTILITY CONFLICT RESOLUTION	LS	$ 20,000.00	$20,000.00
B	SOIL, ASPHALT, AND CONCRETE TESTING	LS	$ 15,000.00	$15,000.00

SUBMITTED BID PRICING SHEET FOR: :_____

	DESCRIPTION	QTY.	UNIT COST	AMOUNT
C	CONSTRUCTION SURVEYING	LS	$ 10,000.00	$10,000.00
D	BLAST MONITORING	LS	$ 20,000.00	$20,000.00

	TOTAL WATER BID AMOUNT	$

For furnishing all products and performing all labor necessary for the construction and completion of assigned miscellaneous water system services and improvements as entitled, the bidder submits a bid in the amount of:

TOTAL BID AMOUNT:

_____

_____

_____**Dollars**

2006 STANDBY CONSTRUCTION MISCELLANEOUS WATER SYSTEM SERVICES

The undersigned hereby agrees to complete all work on the assigned individual projects within the agreed upon days specified in a written Notice To Proceed. He further agrees that the Owner may retain from the monies that are or which may become due the amount of One Thousand (1,000.00) Dollars for each and every consecutive calendar day the completion of the Work may be delayed beyond the time specified, and such amount so to be retained, is hereby agreed to be liquidated damages occurring to the Owner indigent to such delay. Time is of the essence in the performance of the Work. No verbal authorization for the commencement of work is considered valid. Only work authorized in a written Notice to Proceed and signed by the Director of Public Works will be considered valid.

Signed this _____ day of _____ 2003.

Contractor: _____ ***By:*** _____

(Name of Company) (Signature of individual, Partner or Officer Signing the Proposal)

END OF SECTION

FULTON COUNTY

STANDARDS & SPECIFICATIONS

FOR

WATER MAIN CONSTRUCTION

FULTON COUNTY
GEORGIA

DEPARTMENT OF PUBLIC WORKS
TECHNICAL SERVICES GROUP

REVISED
JULY 2005

PREFACE

STANDARD SPECIFICATIONS

These Standard Specifications have been prepared to complement and include by reference the Standard Detail Drawings and to provide the qualitative requirements for products, materials and workmanship for construction of additions to and replacements of the Sanitary Water system (sizes 8-inches through 64 inches and services through 6-inches), which is under the jurisdiction of Fulton County.

All references in these Standard Specifications to "Engineer" shall mean the legal and authorized representative of the Department of Public Works, Fulton County. All references to "Project" shall mean the work being constructed under the jurisdiction of these Standard Specifications. All references to "Contractor" shall mean the individual, company or corporation constructing work under the jurisdiction of these Standard Specifications. All references to "Drawings" shall include, by reference, the Standard Detail Drawings accompanying these Standard Specifications.

These Standard Specifications may be supplemented due to exceptional circumstances, with such noted on the Drawings or supplemental Specifications approved by Fulton County, Director of Public Works.

The Standard Detail Drawings included in these Standard Specifications is a supplemental to the Fulton County Standard Plans approved by the Board of Commissioners dated October 21, 1992. In case of discrepancy and conflict between the Standard Detail Drawings and Standard Plans, the more stringent requirement shall govern unless otherwise directed by the Engineer. A copy of the Fulton County Standard Plans may be examined at the Fulton County Department of Public Works, 141 Pryor Street, Suite 6001, Atlanta, GA 30303. Contact Ray Wooten, Engineer III, for details

END OF PREFACE

STANDARD SPECIFICATIONS TABLE OF CONTENTS

	Preface
01100	Water Mains and Accessories
01200	Water Service Connections
01300	Bore and Jack
01400	Trench Excavation and Backfill
01500	Clearing and Grubbing
01600	Removing and Replacing Pavement
01700	Soil Erosion and Sediment Control
01800	Shop Drawings, Product Data and Samples
01900	Control of Materials
02000	Testing and Laboratory Services
02100	Inspection of Work
02200	Construction Facilities and Temporary Controls
02300	Job Site Security
02400	Dust Control
02500	Material and Equipment
02600	Substitutions and Product Options
02700	Cleaning
02800	Project Record Documents
02900	Warranties and Bonds
03000	Spare Parts and Special Tools
03100	Concrete Form Work
03200	Concrete Reinforcements

STANDARD DETAIL DRAWINGS

Detail	Description
G-1	Trench Terminology
G-2	Water Bedding and Haunching
G-3	Concrete Encasement
G-4	Type I Pavement Replacement
G-5	Type II Pavement Replacement
G-6	Type III Pavement Replacement
W-1	Valve Box
W-2	Fire Hydrant
W-3	Water Main Termination
W-4	Thrust Blocking
W-5	Water Valve Marker
W-6	Water Single Service
W-7	Water Service and Meter
W-8	Air Valve Manual
W-9	Air Valve Automatic
W-10	Fire Line Vault Type I
W-11	Fire Line Vault Type II
W-12	Restraint Joint Pipe Standard Lengths

END OF TABLE OF CONTENTS

SECTION NO. 01100
WATER MAINS AND ACCESSORIES

PART 1 GENERAL

1.01 SCOPE

A. This Section describes products to be incorporated into the water mains and requirements for the installation and use of these items. Furnish all products and perform all labor necessary to fulfill the requirements of these Specifications.

B. Supply all products and perform all work in accordance with applicable American Society for Testing and Material (ASTM), American Water Works Association (AWWA), American National Standards Institute (ANSI), or other recognized standards. Latest revisions of all standards are applicable.

C. Galvanized pipe/fittings shall not be used as any part of the Fulton County Water Transmission and Distribution System, nor shall it be used to join any appurtenances to the System.

D. Water mains, valves, hydrants, and appurtenances shall be installed before the installation of the subbase course or paving or any other utilities except sanitary sewer lines.

1.02 QUALIFICATIONS

If requested by the Engineer, submit evidence that manufacturers have consistently produced products of satisfactory quality and performance for a period of at least two years.

1.03 SUBMITTALS

If required by the County or Engineer, Complete product data and engineering data, including shop drawings, shall be submitted to the Engineer in accordance with the requirements of Section 01340 of the Contract Documents.

1.04 TRANSPORTATION AND HANDLING

A. Unloading: Furnish equipment and facilities for unloading, handling, distributing and storing pipe, fittings, valves and accessories. Make equipment available at all times for use in unloading. Do not drop or dump materials. Any materials dropped or dumped will be subject to rejection without additional justification. Pipe handled on skids shall not be rolled or skidded against the pipe on the ground.

B. Handling: Handle pipe, fittings, valves and accessories carefully to prevent shock or damage. Handle pipe by rolling on skids, forklift, or front end loader. Do not use material damaged in handling. Slings, hooks or pipe tongs shall be padded and used in such a manner as to prevent damage to the exterior coatings or internal lining of the pipe.

1.05 STORAGE AND PROTECTION

A. Store all pipes which cannot be distributed along the route. Make arrangements for the use of suitable storage areas.

B. Stored materials shall be kept safe from damage. The interior of all pipes, fittings and other appurtenances shall be kept free from dirt or foreign matter at all times. Valves and hydrants shall be drained and stored in a manner that will protect them from damage by freezing.

C. Pipe shall not be stacked higher than the limits recommended by the manufacturer. The bottom tier shall be kept off the ground on timbers, rails or concrete. Pipe in tiers shall be alternated: bell, plain end; bell, plain end. At least two rows of timbers shall be placed between tiers and chocks, affixed to each other in order to prevent movement. The timbers shall be large enough to prevent contact between the pipe in adjacent tiers.

D. Stored mechanical and push-on joint gaskets shall be placed in a cool location out of direct sunlight. Gaskets shall not come in contact with petroleum products. Gaskets shall be used on a first-in, first-out basis.

E. Mechanical-joint bolts shall be handled and stored in such a manner that will ensure proper use with respect to types and sizes.

1.06 QUALITY ASSURANCE

The manufacturer shall provide written certification to the Engineer that all products furnished comply with all applicable requirements of these Specifications.

PART 2 PRODUCTS

2.01 DUCTILE IRON PIPE

A. Ductile iron pipe shall be manufactured in accordance with AWWA C151. All pipes, except specials, shall be furnished in nominal lengths of 18 to 20 feet. Sizes will be as shown on the Drawings. **All pipes shall be Class 50 (thickness class) for 16-inch and smaller, and Class 51 for 20-inch and larger, unless otherwise specified or shown on the Drawings**. At the Owner's option, the Engineer may require pipes with pressure rating as indicated in the following table:

Pipe Sizes (inches)	**Pressure Class (psi)**
4 - 12	350
14 - 18	350
20	300
24	250
30 - 54	200
60 - 64	200

B. Flanged pipe minimum wall thickness shall be equal to Special Class 53. Flanges shall be furnished by the pipe manufacturer.

C. Pipe and fittings shall be cement lined in accordance with AWWA C104. A seal coat over the cement lining is not required. Pipe and fittings shall be furnished with a bituminous outside coating.

D. Fittings shall be ductile iron and shall conform to AWWA C110 or AWWA C153 with a minimum rated working pressure of 250 psi.

E. Joints

1. Unless shown or specified otherwise, joints shall be push-on or restrained joint type for pipe and standard mechanical, push-on or restrained joints for fittings. Push-on and mechanical joints shall conform to AWWA C111.

2. The only acceptable restrained joint systems are identified in the table below. No field welding of restrained joint pipe will be allowed.

Acceptable Restrained Joints				
Size	**ACIPCO**	**U.S. Pipe**	**McWane**	**Generic***
4 - 12	Fast-Grip Flex Ring	Field Lok TR Flex	Push-On Restrained Joint Type A	MJ with Retainer Gland
16 - 24	Fast-Grip Flex Ring	Field Lok TR Flex	Push-On Restrained Joint Type A	MJ with Retainer Gland
30 - 36	Flex Ring	TR Flex	Push-On Restrained Joint Type B	MJ with Retainer Gland
42 - 48	Lok-Ring	TR Flex	N/A	MJ with Retainer Gland
54 - 64	Lok-Ring	TR Flex	N/A	N/A

* Fittings and valves only, and only where specifically allowed.

3. Restrained joint pipe (RJP) on supports shall have bolted joints and shall be specifically designed for clear spans of at least 36 feet.

4. Flanged joints shall meet the requirements of ANSI B16.1, Class 125.

F. Provide the appropriate gaskets for mechanical and flange joints. Gaskets for flange joints shall be made of 1/8-inch thick, cloth reinforced rubber; gaskets shall be full face type.

G. Bolts and Nuts

1. Provide the necessary bolts for connections. All bolts and nuts shall be threaded in accordance with ANSI B1.1, Coarse Thread Series, Class 2A external and 2B internal fit. All bolts and nuts shall be made in the U.S.A.

2. Bolts and nuts for mechanical joints shall be Tee Head Bolts and nuts of high strength low-alloy steel in accordance with ASTM A 242 to the dimensions shown in AWWA C111/ANSI A21.11.

3. Flanged joints shall be bolted with through stud or tap bolts of required size as directed. Bolt length and diameter shall conform to ANSI/AWWA C115 for Class 125 flanges shown in ANSI/ASME B16.1.

4. Bolts for exposed service shall be zinc plated, cold pressed, steel machine bolts conforming to ASTM A 307, Grade B. Nuts for exposed service shall be zinc plated, heavy hex conforming to ASTM A 563. Zinc plating shall conform to ASTM B 633, Type II.

5. Bolts for submerged service shall be stainless steel machine bolts conforming to ASTM A 193, Grade B8. Nuts shall be heavy hex, stainless steel conforming to ASTM A 194, Grade 8.

H. Mechanical joint glands shall be ductile iron.

I. Welded Outlet: Welded outlets may be provided in lieu of tees or saddles on mains with a diameter greater than or equal to 24-inches. The pipe joint on the outlet pipe shall meet the joint requirements specified above. The minimum pipe wall thickness of the parent pipe and the outlet pipe shall be Special Thickness Class 53 (Pressure Class 350 for 60 and 64-inch sizes). The welded outlet shall be rated for 250 psi working pressure. Each welded outlet shall be hydrostatically tested at 500 psi. The welded outlet shall be fabricated by the manufacturer of the parent pipe. The maximum outlet diameters shall not exceed those listed in the table below:

Parent Pipe Diameter, Inches	**Maximum Outlet Diameter, Inches**
24	16
30	20
36	24
42	30
48	30
54	30
60	30
64	30

J. Ductile iron pipe shall be encased with polyethylene film where shown on the Drawings. Polyethylene film shall be in accordance with AWWA C105.

K. Thrust collars shall be welded-on ductile iron body type designed to withstand thrust due to 250 psi internal pressure on a dead end.

L. Acceptance will be on the basis of the Engineer's inspection and the manufacturer's written certification that the pipe was manufactured and tested in accordance with the applicable standards.

2.02 COPPER PIPE

A. Pipe shall be rolled copper tubing, ASTM B 88, Type K.

B. Where required, sweat to screw adapters shall be cast bronze ANSI B16.18, wrought solder joint ANSI B16.22. Unions shall be cast bronze or bronze with solder connections. Joints shall be made with 95/5 solder for Type K pipe.

2.03 PIPING APPURTENANCES

A. Retainer Glands

1. Retainer glands shall be Megalug Series 1100, as manufactured by EBAA Iron, or Uni-Flange Series 1400, as manufactured by Ford Meter Box Company.

2. Retainer glands shall be provided at all mechanical joints, including fittings, valves, hydrants and other locations as shown on the Drawings.

B. Hydrant Tees: Hydrant tees shall be equal to ACIPCO A10180 or U.S. Pipe U-592.

C. Anchor Couplings: Lengths and sizes shall be as shown on the Drawings. Anchor couplings shall be equal to ACIPCO A 10895 or U.S. Pipe U-591.

D. Hydrant Connector Pipe: The connector pipe shall be ductile iron meeting the requirements of AWWA C153; 24-inch offset design so that the hydrant can be adjusted to ensure placement at the proper grade; shall have an anchoring feature at both ends so that when used with M.J. split glands a restrained joint is provided; cement lined in accordance with AWWA C104 and equal to the Gradelok as manufactured by Assured Flow Sales, Inc., Sarasota, Florida.

E. Tapping Saddles: Tapping saddles are not allowed.

F. Detection Tape: Detection tape shall be composed of a solid aluminum foil encased in a protective plastic jacket. Tapes shall be color coded in accordance with APWA color codes with the following legends: Water Systems, Safety Precaution Blue, “Caution Water Line Buried Below”. Colors may be solid or striped. Tape shall be permanently printed with no surface printing allowed. Tape width shall be a minimum of 2-inches when buried less than 10-inches below the surface. Tape width shall be a minimum of 3-inches when buried greater than 10-inches and less than 20-inches. Detection tape shall be equal to Lineguard Type III Detectable or Allen Systems Detectatape.

G. Electronic Markers: Electronic markers shall be buried with utilities, serve as a signaling device. Each marker shall be color-coded in accordance to APWA standards and produces an industry-specific frequency. Each marker shall contain a passive antenna that requires no internal power source. Markers shall be of water-resistant polyethylene shells and impervious to minerals, chemicals, and underground temperature extremes. Electronic markers shall be compatible with Subsite EML 75R Locator. Markers shall be equal to 3M ScotchMark Full Range Electronic Markers #1252 or equivalent.

2.04 GATE VALVES (GV)

A. Use gate valves for 12-inches in diameter and smaller water mains.

1. Gate valves shall be resilient-seated type conforming to the requirements of AWWA C509 or AWWA C515.

2. Valves through 12-inches in diameter shall have a minimum rated working pressure of 250 psi.

3. Valves less than 4-inches in diameter shall have threaded ends. Larger valves shall be mechanical joint unless shown otherwise on the Drawings.

4. Valves shall be non-rising stem type with a 2-inch square wrench nut, and shall open left. The manufacturer shall provide an affidavit of compliance with the applicable AWWA standards.

5. All internal ferrous surfaces shall be coated with epoxy to a minimum thickness of 4 mils. The epoxy shall be non-toxic, impart no taste to the water and shall conform to AWWA C550.

6. All seals between valve parts, such as body and bonnet, bonnet and bonnet cover, shall be flat gaskets or O-rings.

7. Valve disks shall be made of cast or ductile iron having a vulcanized, synthetic rubber coating.

8. Valves shall be manufactured by American Flow Control, Mueller, or M & H Valve.

2.05 BUTTERFLY VALVES (BV)

A. Use butterfly valves for 16-inches and larger diameter water mains.

B. Unless indicated in the Drawings, butterfly valves shall be 250 pound valves. Butterfly valves shall be resilient seated, short body design, and shall be designed, manufactured, and tested in accordance with all requirements of AWWA C504, and as modified below. Valves shall be designed for a rated working pressure of 250 psi. Class B, AWWA C504 Section 5.2 testing requirements are modified as follows:

1. the leakage test shall be performed at a pressure of 250 psi;

2. the hydrostatic test shall be performed at a pressure of 500 psi; and

3. proof of design tests shall be performed and certification of such proof of design test shall be provided to the Engineer.

C. 150 Pound Valves: Valve bodies shall be ductile iron conforming to ASTM A 536, Grade 65-45-12 or ASTM A 126, Grade B cast iron. Shafts shall be ASTM A 276, Type 304 stainless steel, machined and polished. Valve discs shall be ductile iron, ASTM A 536, Grade 65-45-12 or ASTM A 126, Grade B cast iron. The valve shall have a resilient seat.

D. 250 Pound Valves: Valve bodies shall be ductile iron conforming to ASTM A 536, Grade 65-45-12 or ASTM A 126, Grade B cast iron. Shafts and shaft hardware shall be ASTM A 564, Type 630 stainless steel, machined and polished. Valve discs shall be ductile iron, ASTM A 536, Grade 65-45-12. The resilient valve seat shall be located either on the valve disc or in the valve body and shall be fully field adjustable and field replaceable.

E. Valves shall be installed with the valve shafts horizontal. Valves and actuators shall have seals on all shafts and gaskets on valve actuator covers to prevent the entry of water. Actuator mounting brackets shall be totally enclosed and shall have gasket seals.

F. Actuators

1. Valves shall be equipped with traveling nut, self-locking type actuators designed, manufactured and tested in accordance with AWWA C504. Actuators shall be capable of holding the disc in any position between full open and full closed without any movement or fluttering of the disc.

2. Actuators shall be furnished with fully adjustable mechanical stop-limiting devices. Actuators that utilize the sides of the actuator housing to limit disc travel are unacceptable.

3. Valve actuators shall be capable of withstanding a minimum of 450 foot pounds of input torque in either the open or closed position without damage.

G. Operators: Valves for buried service shall have a nut type operator and shall be equipped with a valve box and stem extension, as required.

H. Valve ends shall be mechanical joint type, except where flanged or restrained joint ends are shown. Flange joints shall meet the requirements of ANSI B16.1, Class 125.

I. Butterfly valves shall be manufactured by Mueller (Pratt), American, M&H, or DeZurik.

2.06 FIRE HYDRANTS (FH)

A. All fire hydrants shall conform to the requirements of AWWA C502 for 150 psi minimum working pressure. Hydrants shall be the compression type, closing with line pressure. The valve opening shall be 4-1/2-inches.

B. In the event of a traffic accident, the hydrant barrel shall break away from the standpipe at a point above grade and in a manner which will prevent damage to the barrel and stem, preclude opening of the valve, and permit rapid and inexpensive restoration without digging or cutting off the water.

C. The means for attaching the barrel to the standpipe shall permit facing the hydrant a minimum of 360 degrees in different directions.

D. Hydrants shall be fully bronze mounted with all working parts of bronze. Valve seat ring shall be bronze and shall screw into a bronze retainer.

E. All working parts, including the seat ring shall be removable through the top without disturbing the barrel of the hydrant.

F. The operating nut shall match those on the existing hydrants. The operating threads shall be totally enclosed in an operating chamber, separated from the hydrant barrel by a rubber O-ring stem seal and lubricated by a grease or an oil reservoir.

G. Hydrant shall be a non-freezing design and be provided with a simple, positive, and automatic drain which shall be fully closed whenever the main valve is opened.

H. Hose and pumper connections shall be breech-locked, pinned, or threaded and pinned to seal them into the hydrant barrel. Each hydrant shall have two 2-1/2-inch hose connections and one 4-1/2-inch pumper connection, all with National Standard threads and each equipped with cap and non-kinking chain.

I. Hydrants shall be furnished with a mechanical joint connection to the spigot of the 6-inch hydrant lead.

J. Minimum depth of bury shall be 4.0 feet. Provide extension section or hydrant connector pipe where necessary for proper vertical installation and in accordance with manufacturer's recommendations.

K. All outside surfaces of the barrel above grade shall be painted silver with Sherwin Williams KEM 400.

L. Hydrants shall be traffic model and shall be American-Darling B-84-B, Mueller Super Centurion or M & H Valve 929.

2.07 VALVE BOXES (VB) AND EXTENSION STEMS

A. All valve boxes shall be equipped with valve boxes. The valve boxes shall be cast iron two-piece screw type with drop covers. Valve boxes shall have a 5.25-inch inside diameter. Valve box covers shall weigh a minimum of 13 pounds. The valve boxes shall be adjustable to 6-inches up or down from the nominal required cover over the pipe. Valve boxes shall be of sufficient length that bottom flange of the lower belled portion of the box is below the valve operating nut. Ductile or cast iron extensions shall be provided as necessary. Covers shall have "WATER VALVE" or "WATER" cast into them. Valve boxes shall be manufactured in the United States.

B. All valves shall be furnished with extension stems if operating nut is greater than four feet deep, to bring the operating nut to within 24-inches of the top of the valve box. Connection to the valve shall be with a wrench nut coupling and a set screw to secure the coupling to the valve's operating nut. The coupling and square wrench nut shall be welded to the extension stem. Extension stems shall be equal to Mueller A-26441 or M & H Valve Style 3801.

2.08 VALVE MARKERS (VM)

The Contractor shall provide a concrete valve marker as detailed on the Drawings for each valve installed outside paved areas. Valve markers shall be stamped “WATER”. Valve markers shall be in accordance with County standards.

2.09 TAPPING SLEEVES AND VALVES (TS&V)

A. Tapping sleeves for mains shall be ductile iron of the split-sleeve, mechanical joint type. Tapping sleeves shall be equal to Mueller H-615.

B. The Contractor shall be responsible for determining the outside diameter of the pipe to be connected to prior to ordering the sleeve. The tapping sleeve shall be rated for 250 psi.

C. Valves shall be gate valves furnished in accordance with the specifications shown above, with flanged connection to the tapping sleeve and mechanical joint connection to the branch pipe. The tapping sleeve shall be supplied by the valve manufacturer.

2.10 CORPORATION COCKS AND CURB STOPS

Corporation cocks and curb stops shall be ball type, shall be made of bronze conforming to ASTM B 61 or B 62, and shall be suitable for the working pressure of the system. Ends shall be suitable for compression joint. Threaded ends for inlet and outlet of corporation cocks shall conform to AWWA C800; coupling nut for connection to flared copper tubing shall conform to ANSI B16.26.

Corporation cocks shall be manufactured by Ford (FB-/1000-4-G) or equivalent. Curb stops shall be manufactured by Ford (BA21-444W-Full Port) or equivalent.

2.11 AIR VALVES FOR WATER SERVICE

A. Construction and Design

1. The air release and vacuum break valve shall be of the compact single chamber design with solid cylindrical HDPE control floats housed in a tubular stainless steel body with epoxy powder coated cast iron or steel ends secured by means of stainless steel tie rods.

2. The valve shall have an integral "anti-shock" orifice mechanism which shall operate automatically to limit transient pressure rise or shock induced by closure to two times valve rated working pressure.

3. The intake orifice area shall be equal to the nominal size of the valve.

4. Large orifice sealing shall be affected by the flat face of the control float seating against a nitrile rubber O-ring housed in a dovetail groove circumferentially surrounding the orifice.

5. Discharge of pressurized air shall be controlled by the seating and unseating of a small orifice nozzle on a natural rubber seal affixed into the control float. The nozzle shall have a flat seating land surrounding the orifice so that the damage to the rubber seal is prevented.

6. The valve construction shall be proportioned with regard to material strength characteristics, so that deformation, leaking or damage of any kind does not occur by submission to twice the designed working pressure.

7. The valve design shall incorporate an over pressure safety feature that will fail without an explosive effect, such as is normally the case when highly compressed air is released suddenly. The feature shall consist of replaceable components such as gaskets or seals.

8. Connection to the valve inlet shall be facilitated by a flanged end conforming to ANSI B16.1 Class 125. Flanged ends shall be supplied with the requisite number of stainless steel or mild steel screwed studs inserted for alignment to the specific standard.

9. Provide a 1/4-inch NPT test/bleed cock.

10. An isolation valve between the main and the air valve shall be installed in accordance with the Drawings.

B. Air valve shall be Vent-O-Mat, Series RBX1631.

2.12 SAMPLING STATION

A. The sampling station shall have the correct laying length to install in a meter box specified in Section 02668. Both inlet and outlet connections shall be standard 3/4-inch meter threads. The station shall consist of a standard meter resetter with the inlet leading up through the water system's residential meter, through the check valve, and then out the outlet. The sampling station apparatus shall consist of a 1/2-inch lockable shut-off valve leading to a valve riser, then the 3/8-inch male quick disconnect valve. The valve and riser shall be positioned directly in line with the meter setter to avoid turning of the whole sampling station when pushing and sampling rod down on the valve. All of the above mentioned parts shall be brass, with plastic PVC push-on cap protecting the quick

disconnect valve when not in use. The cap shall be sealed watertight with an O-ring below the quick disconnect valve.

B. A portable sampling rod with a female inlet shall couple to the male quick coupling with a quarter-turn and start the water flow. This all brass rod shall have two outlets, one for flushing, the other for sampling.

C. The sampling station and portable sampling rod shall be equal to Kupferle Foundry Company, Model #93-WM.

2.13 DOUBLE DETECTOR BACKFLOW PREVENTER ASSEMBLY

A. Provide a double detector check (DDC) backflow preventer (BFP) assembly in a size to match that of the required fire line service piping. The DDC-BFP assembly shall be provided with a OS&Y gate valve near the inlet and outlet sides of the device.

B. The DDC device shall be provided with three brass ball valve test cocks fitted with brass or plastic threaded plugs. A fourth test cock shall be provided on the upstream side of the inlet shut-off valve.

C. The DDC device and shut-off valve bodies shall be cast iron, coated inside and outside with a NSF-approved, fused epoxy coating and assembled with bolts that are resistant to electrolysis. All DDC device interior/exterior components shall be of materials equal in corrosion resistance to bronze and/or stainless steel to resist electrolysis.

D. Check valves shall have replaceable seats, and be accessible by top-entry only for maintenance and repair. The detector bypass line on the DDC-BFP assembly shall be of 3/4-inch copper pipe and have a bronze detector meter and a 3/4-inch DCV-BFP complete with unions and shut-off valves.

E. The DDC-BFP assembly shall be classified or listed by the Underwriters Laboratories, Factory Mutual Insurance, and bear the ASSE seal (ASSE Standard 1049). The DDC-BFP assembly shall have approval of and conform to all current requirements of the University of Southern California, Foundation for Cross-Connection Control (USC-FCCC). The DDC-BFP assembly shall be individually factory tested, shipped and installed as a unit.

F. The DDC-BFP assembly shall not be buried in earth but installed below ground in a concrete vault, and as close as practical to the property line of the premises.

G. Under no condition will any connection be allowed on the system other than for fire fighting or fire protection purposes.

H. All DDC-BFP assemblies shall be tested at the time of installation and at least annually thereafter. A copy of all test and maintenance reports must be submitted to the Fulton County Water Department, Dogwood Station.

2.14 PRECAST CONCRETE PRODUCTS

A. Provide precast concrete products in accordance with the following:

1. Precast Concrete Sections

a. Precast concrete sections shall meet the requirements of ASTM C 478 for round shaped and ASTM C 913 for rectangular shaped precast concrete products. The minimum compressive strength of the concrete in precast sections shall be 4,000 psi.

The minimum wall thickness shall be one-twelfth of the inside diameter of the base, riser or the largest cone diameter.

b. Transition slabs which convert bases larger than four feet in diameter to four foot diameter risers shall be designed by the precast concrete manufacturer to carry the live and dead loads exerted on the slab.

c. Seal joints between precast sections by means of rubber O-ring gaskets or flexible butyl rubber sealant. Butyl rubber sealants shall meet the requirements of AASHTO M-198. Sealant shall be pre-formed type with a minimum nominal diameter of 1-inch.

d. Butyl rubber sealant shall be equal to Kent Seal No. 2 or Concrete Sealants CS 202.

2. Brick and Mortar: Brick shall be whole and hardburned, conforming to ASTM C 32, Grade MS. Mortar shall be made of one part Portland cement and two parts clean sharp sand. Cement shall be Type 1 and shall conform to ASTM C 150. Sand shall meet ASTM C 144.

3. Iron Castings

a. Cast iron manhole frames, covers and steps shall meet the requirements of ASTM A 48 for Class 30 gray iron and all applicable local standards. All castings shall be tough, close grained, smooth and free from blow holes, blisters, shrinkage, strains, cracks, cold shots and other imperfections. No casting will be accepted which weighs less than 95 percent of the design weight. Shop drawings must indicate the design weight and provide sufficient dimensions to permit checking. All castings shall be thoroughly cleaned in the shop and given two coats of approved bituminous paint before rusting begins.

b. Manhole frames and covers shall be equal to the following:

Type	**Design Weight**	**Manufacturer's Reference**	
Bolt Down	400#	Neenah A-1916-F1	Vulcan V-2358

c. All frames and covers shall have machined horizontal bearing surfaces.

d. Bolt-down covers shall be equipped with four 1/2-inch stainless steel bolts and a 1/8-inch red rubber or rubber O-ring gasket. Covers shall be rotatable and interchangeable. Bolt holes shall be bored through so that debris entering the bolt hole will fall into the manhole. Bolt holes shall have the full 360 degree circle within the cover's radius when bored through the cover.

4. Plastic Steps: Manhole steps of polypropylene, molded around a steel rod, equal to products of M.A. Industries may be used.

5. Floor Door

a. Door shall be single or double leaf type as shown on the Drawings.

b. The frame shall be 1/4-inch extruded aluminum alloy 6063-T6, with built-in neoprene cushion and with strap anchors bolted to the exterior. Door leaf shall be 1/4-inch aluminum diamond plate, alloy 6061-T6, reinforced with aluminum stiffeners as required. Stainless steel hinges shall be bolted to the underside and pivot on torsion bars that counterbalance the door for easy operation. The door shall open to 90 degrees and lock automatically in that position. A vinyl grip handle shall be provided to release the cover for closing. The door shall be built to withstand a live load of 300 pounds per square foot, and shall be equipped with a snap lock and removable handle.

Bituminous coating shall be applied to exterior of frame by the manufacturer. The door shall also be provided with a hasp in addition to the built-in locking mechanism.

c. The floor door shall be manufactured by The Bilco Company or Thompson Fabricating Company.

6. Vents

a. Where vent pipes are shown on the Drawings, vents shall be of one-piece, welded steel construction. Vent pipes shall equal air valve size, but no less than 4-inches. The vent pipe shall be grouted into a precast hole in the vault. The discharge of the vent pipe shall be provided with a 3/16-inch PVC coated mesh screen.

b. Where vent pipes are not shown on the Drawings, the frame and cover or floor door shall be provided with 1-inch holes to provide equivalent opening as in air valve, but not less than two. The quantity for each valve size is as follows: 2-inch, 4; 3-inch, 9; 4-inch, 16; 6-inch, 36; 8-inch, 64.

2.15 CONCRETE

Concrete shall have a compressive strength of not less than 3000 psi, with not less than 5.5 bags of cement per cubic yard and a slump between 3 and 5-inches. For job mixed concrete, submit the concrete mix design for approval by the Engineer. Ready-mixed concrete shall be mixed and transported in accordance with ASTM C 94. Reinforcing steel shall conform to the requirements of ASTM A 615, Grade 60.

PART 3 EXECUTION

3.01 EXISTING UTILITIES AND OBSTRUCTIONS

A. The Drawings indicate utilities or obstructions that are known to exist according to the best information available to the County. The Contractor shall call the Utilities Protection Center (UPC) (800-282-7411) as required by Georgia Law (O.C.G.A. Sections 25-9-1 through 25-9-13) and shall call all utilities, agencies or departments that own and/or operate utilities in the vicinity of the construction work site at least 72 hours (three business days) prior to construction to verify the location of the existing utilities.

B. Existing Utility Location: The following steps shall be exercised to avoid interruption of existing utility service.

1. Provide the required notice to the utility owners and allow them to locate their facilities according to Georgia law. Field utility locations are valid for only 10 days after original notice. The Contractor shall ensure, at the time of any excavation, that a valid utility location exists at the point of excavation.

2. Expose the facility, for a distance of at least 200 feet in advance of pipeline construction, to verify its true location and grade. Repair, or have repaired, any damage to utilities resulting from locating or exposing their true location.

3. Avoid utility damage and interruption by protection with means or methods recommended by the utility owner.

4. Maintain a log identifying when phone calls were made, who was called, area for which utility relocation was requested and work order number issued, if any. The Contractor shall provide the Engineer an updated copy of the log bi-weekly, or more frequently if required.

C. Conflict with Existing Utilities

1. Horizontal Conflict: Horizontal conflict shall be defined as when the actual horizontal separation between a utility, main, or service and the proposed water main does not permit safe installation of the water main by the use of sheeting, shoring, tieing-back, supporting, or temporarily suspending service of the parallel or crossing facility. The Contractor may change the proposed alignment of the water main to avoid horizontal conflicts if the new alignment remains within the available right-of-way or easement, complies with regulatory agency requirements and after a written request to and subsequent approval by the Engineer. Where such relocation of the water main is denied by the Engineer, the Contractor shall arrange to have the utility, main, or service relocated.

2. Vertical Conflict: Vertical conflict shall be defined as when the actual vertical separation between a utility, main, or service and the proposed water main does not permit the crossing without immediate or potential future damage to the utility, main, service, or the water main. The Contractor may change the proposed grade of the water main to avoid vertical conflicts if the changed grade maintains adequate cover and complies with regulatory agencies requirements after written request to and subsequent approval by the Engineer. Where such relocation of the water main is denied by the Engineer, the Contractor shall arrange to have the utility, main, or service relocated.

D. Electronic Locator: Have available at all times an electronic pipe locator and a magnetic locator, in good working order, to aid in locating existing pipe lines or other obstructions.

E. Water and Sewer Separation

1. Water mains should maintain a minimum 10 foot edge-to-edge separation from sewer lines, whether gravity or pressure. If the main cannot be installed in the prescribed easement or right-of-way and provide the 10 foot separation, the separation may be reduced, provided the bottom of the water main is a minimum of 18-inches above the top of the sewer. Should neither of these two separation criteria be possible, the water main shall be installed below the sewer with a minimum vertical separation of 18-inches.

2. The water main, when installed below the sewer, shall be encased in concrete with a minimum 6-inch concrete depth to the first joint in each direction. Where water mains cross the sewer, the pipe joint adjacent to the pipe crossing the sewer shall be cut to provide maximum separation of the pipe joints from the sewer.

3. No water main shall pass through, or come in contact with, any part of a sanitary sewer manhole.

3.02 CONSTRUCTION ALONG HIGHWAYS, STREETS AND ROADWAYS

A. Install pipe lines and appurtenances along highways, streets and roadways in accordance with the applicable regulations of, and permits issued by, the Department of Transportation and Fulton County with reference to construction operations, safety, traffic control, road maintenance and repair.

B. Traffic Control

1. The Contractor shall provide, erect and maintain all necessary barricades, suitable and sufficient lights and other traffic control devices; provide qualified flagmen where necessary

to direct traffic; take all necessary precautions for the protection of the work and the safety of the public. Flagmen shall be certified by a Georgia DOT approved training program.

2. Construction traffic control devices and their installation shall be in accordance with the current Manual On Uniform Traffic Control Devices for Streets and Highways.

3. Placement and removal of construction traffic control devices shall be coordinated with the Georgia Department of Transportation and Fulton County a minimum of 48 hours in advance of the activity.

4. Placement of construction traffic control devices shall be scheduled ahead of associated construction activities. Construction time in street right-of-way shall be conducted to minimize the length of time traffic is disrupted. Construction traffic control devices shall be removed immediately following their useful purpose. Traffic control devices used intermittently, such as "Flagmen Ahead", shall be removed and replaced when needed.

5. Existing traffic control devices within the construction work zone shall be protected from damage. Traffic control devices requiring temporary relocation shall be located as near as possible to their original vertical and horizontal locations. Original locations shall be measured from reference points and recorded in a log prior to relocation. Temporary locations shall provide the same visibility to affected traffic as the original location. Relocated traffic control devices shall be reinstalled in their original locations as soon as practical following construction.

6. Construction traffic control devices shall be maintained in good repair and shall be clean and visible to affected traffic for daytime and nighttime operation. Traffic control devices affected by the construction work zone shall be inspected daily.

7. Construction warning signs shall be black legend on an orange background. Regulatory signs shall be black legend on a white background. Construction sign panels shall meet the minimum reflective requirements of the Georgia Department of Transportation and Fulton County. Sign panels shall be of durable materials capable of maintaining their color, reflective character and legibility during the period of construction.

8. Channelization devices shall be positioned preceding an obstruction at a taper length as required by the current Manual On Uniform Traffic Control Devices for Streets and Highways, as appropriate for the speed limit at that location. Channelization devices shall be patrolled to insure that they are maintained in the proper position throughout their period of use.

C. Construction Operations

1. Perform all work along highways, streets and roadways to minimize interference with traffic.

2. Stripping: Where the pipe line is laid along road right-of-way, strip and stockpile all sod, topsoil and other material suitable for right-of-way restoration.

3. Trenching, Laying and Backfilling: Do not open the trench any further ahead of pipe laying operations than is necessary. Backfill and remove excess material immediately behind laying operations. Complete excavation and backfill for any portion of the trench in the same day.

4. Shaping: Reshape damaged slopes, side ditches, and ditch lines immediately after completing backfilling operations. Replace topsoil, sod and any other materials removed from shoulders.

5. Construction operations shall be limited to 400 feet along areas, including clean-up and utility exploration.

D. Excavated Materials: Do not place excavated material along highways, streets and roadways in a manner which obstructs traffic. Sweep all scattered excavated material off of the pavement in a timely manner.

E. Drainage Structures: Keep all side ditches, culverts, cross drains, and other drainage structures clear of excavated material. Care shall be taken to provide positive drainage to avoid ponding or concentration of runoff.

F. Landscaping Features: Landscaping features shall include, but are not necessarily limited to: fences; property corners; cultivated trees and shrubbery; manmade improvements; subdivision and other signs within the right-of-way and easement. The Contractor shall take extreme care in moving landscape features and promptly re-establishing these features.

G. Maintaining Highways, Streets, Roadways and Driveways

1. Maintain streets, highways, roadways and driveways in suitable condition for movement of traffic until completion and final acceptance of the Work.

2. During the time period between pavement removal and completing permanent pavement replacement, maintain highways, streets and roadways by the use of steel running plates. Running plate edges shall have asphalt placed around their periphery to minimize vehicular impact. The backfill above the pipe shall be compacted as specified elsewhere up to the existing pavement surface to provide support for the steel running plates.

3. Furnish a road grader or front-end loader for maintaining highways, streets, and roadways. The grader or front-end loader shall be available at all times.

4. Immediately repair all driveways that are cut or damaged. Maintain them in a suitable condition for use until completion and final acceptance of the Work.

3.03 PIPE DISTRIBUTION

A. Pipe shall be distributed and placed in such a manner that will not interfere with traffic.

B. No pipe shall be strung further along the route than 1,000 feet beyond the area in which the Contractor is actually working without written permission from the County. The County reserves the right to reduce this distance to a maximum distance of 200 feet in residential and commercial areas based on the effects of the distribution to the adjacent property owners.

C. No street or roadway may be closed for unloading of pipe without first obtaining permission from the proper authorities. The Contractor shall furnish and maintain proper warning signs and obstruction lights for the protection of traffic along highways, streets and roadways upon which pipe is distributed.

D. No distributed pipe shall be placed inside drainage ditches.

E. Distributed pipe shall be placed as far as possible from the roadway pavement, but no closer than five feet from the roadway pavement, as measured edge-to-edge.

3.04 LOCATION AND GRADE

A. The Drawings show the alignment of the water main and the location of valves, hydrants and other appurtenances.

B. Prior to clearing and grubbing, the Engineer will provide a temporary bench mark along the water main route and at all other locations where the alignment of the water main changes significantly.

C. Construction Staking

1. The base lines for locating the principal components of the work are shown on the Drawings. Base lines shall be defined as the line to which the location of the water main is referenced, i.e., edge of pavement, road centerline, property line, right-of-way or survey line. The Contractor shall be responsible for performing all survey work required for constructing the water main, including the establishment of base lines and any detail surveys needed for construction. This work shall include the staking out of permanent and temporary easements to insure that the Contractor is not deviating from the designated easements.

2. The level of detail of survey required shall be that which the correct location of the water main can be established for construction and verified by the Engineer. Where the location of components of the water main, e.g. tunnels and fittings, are not dimensioned, the establishment on the location of these components shall be based upon scaling these locations from the Drawings with relation to readily identifiable land marks, e.g., survey reference points, power poles, manholes, etc.

D. Reference Points

1. The Contractor shall take all precautions necessary, which includes, but is not necessarily limited to, installing reference points, in order to protect and preserve the centerline or baseline established by the Engineer.

2. Reference points shall be placed, at or no more than three feet, from the outside of the construction easement or right-of-way. The location of the reference points shall be recorded in a log with a copy provided to the Engineer for use, prior to verifying reference point locations. Distances between reference points and the manhole centerlines shall be accurately measured to 0.01 foot.

3. The Contractor shall give the Engineer reasonable notice that reference points are set. The reference point locations must be verified by the Engineer prior to commencing clearing and grubbing operations.

E. After the Contractor locates and marks the water main centerline or baseline, the Contractor shall perform clearing and grubbing.

F. Construction shall begin at a connection location and proceed without interruption. Multiple construction sites shall not be permitted without written authorization from the Engineer for each site.

G. The Contractor shall be responsible for any damage done to reference points, base lines, center lines and temporary bench marks, and shall be responsible for the cost of re-establishment of reference points, base lines, center lines and temporary bench marks as a result of the operations.

3.05 LAYING AND JOINTING PIPE AND ACCESSORIES

A. Lay all pipes and fittings to accurately conform to the lines and grades established by the Engineer.

B. Pipe Installation

1. Proper implements, tools and facilities shall be provided for the safe performance of the Work. All pipe, fittings, valves and hydrants shall be lowered carefully into the trench by means of slings, ropes or other suitable tools or equipment in such a manner as to prevent damage to water main materials and protective coatings and linings. Under no circumstances shall water main materials be dropped or dumped into the trench.

2. All pipes, fittings, valves, hydrants and other appurtenances shall be examined carefully for damage and other defects immediately before installation. Defective materials shall be marked and held for inspection by the Engineer, who may prescribe corrective repairs or reject the materials.

3. All lumps, blisters and excess coating shall be removed from the socket and plain ends of each pipe, and the outside of the plain end and the inside of the bell shall be wiped clean and dry and free from dirt, sand, grit or any foreign materials before the pipe is laid. No pipe containing dirt shall be laid.

4. Foreign material shall be prevented from entering the pipe while it is being placed in the trench. No debris, tools, clothing or other materials shall be placed in the pipe at any time.

5. As each length of pipe is placed in the trench, the joint shall be assembled and the pipe brought to correct line and grade. The pipe shall be secured in place with approved backfill material.

6. It is not mandatory to lay pipe with the bells facing the direction in which work is progressing.

7. Applying pressure to the top of the pipe, such as with a backhoe bucket, to lower the pipe to the proper elevation or grade, shall not be permitted.

8. Provide electronic marker for all water main. Electronic marker shall be the “Ball” type for a depth up to 4 feet and the “Full-Range” type for depth greater than 4 feet. Electronic markers shall be installed in an interval of 20 feet or as directed by the Engineer. Electronic marker shall be equal to 3M ScotchMark and shall be compatible with Subsite EML (Electronic Marker Locator) System.

C. Alignment and Gradient

1. Lay pipe straight in alignment and gradient or follow true curves as nearly as practicable. Do not deflect any joint more than the maximum deflection recommended by the manufacturer.

2. Maintain a transit, level and accessories on the job to lay out angles and ensure that deflection allowances are not exceeded.

D. Expediting of Work: Excavate, lay the pipe, and backfill as closely together as possible. Do not leave unjointed pipe in the trench overnight. Backfill and compact the trench as soon as possible after laying and jointing is completed. Cover the exposed end of the installed pipe each day at the

close of work and at all other times when work is not in progress. If necessary to backfill over the end of an uncompleted pipe or accessory, close the end with a suitable plug, either push-on, mechanical joint, restrained joint or as approved by the Engineer.

E. Joint Assembly

1. Push-on, mechanical, flange and restrained type joints shall be assembled in accordance with the manufacturer's recommendations.

2. The Contractor shall inspect each pipe joint within 1,000 feet on either side of main line valves to insure 100 percent seating of the pipe spigot, except as noted otherwise.

3. Each restrained joint shall be inspected by the Contractor to ensure that it has been “homed” 100 percent.

4. The Contractor shall internally inspect each pipe joint to insure proper assembly for pipe 24-inches in diameter and larger after the pipe has been brought to final alignment.

F. Cutting Pipe: Cut ductile iron pipe using an abrasive wheel saw. Cut PVC pipe using a suitable saw; remove all burrs and smooth the end before jointing. The Contractor shall cut the pipe and bevel the end, as necessary, to provide the correct length of pipe necessary for installing the fittings, valves, accessories and closure pieces in the correct location. Only push-on or mechanical joint pipe shall be cut.

G. Polyethylene Encasement: Installation shall be in accordance with AWWA C105 and the manufacturer's instructions. All ends shall be securely closed with tape and all damaged areas shall be completely repaired to the satisfaction of the Engineer.

H. Valve and Fitting Installation

1. Prior to installation, valves shall be inspected for direction of opening, number of turns to open, freedom of operation, tightness of pressure-containing bolting and test plugs, cleanliness of valve ports and especially seating surfaces, handling damage and cracks. Defective valves shall be corrected or held for inspection by the Engineer. Valves shall be closed before being installed.

2. Valves, fittings, plugs and caps shall be set and joined to the pipe in the manner specified in this Section for cleaning, laying and joining pipe, except that 12-inch and larger valves shall be provided with special support, such as treated timbers, crushed stone, concrete pads or a sufficiently tamped trench bottom so that the pipe will not be required to support the weight of the valve. Valves shall be installed in the closed position.

3. A valve box shall be provided on each underground valve. They shall be carefully set, centered exactly over the operating nut and truly plumbed. The valve box shall not transmit shock or stress to the valve. The bottom flange of the lower belled portion of the box shall be placed below the valve operating nut. This flange shall be set on brick, so arranged that the weight of the valve box and superimposed loads will bear on the base and not on the valve or pipe. The valve box cover shall be flush with the surface of the finished area or such other level as directed by the Engineer.

4. In no case shall valves be used to bring misaligned pipe into alignment during installation. Pipe shall be supported in such a manner as to prevent stress on the valve.

5. A valve marker shall be provided for each underground valve. Unless otherwise detailed on the Drawings or directed by the Engineer, valve markers shall be installed 6-inches inside the right-of-way or easement, and buried to a depth of 30-inches.

6. A precast concrete vault shall be installed for 24-inch valves and larger.

I. Hydrant Installation

1. Prior to installation, inspect all hydrants for direction of opening, nozzle threading, operating nut and cap nut dimensions, tightness of pressure-containing bolting, cleanliness of inlet elbow, handling damage and cracks. Defective hydrants shall be corrected or held for inspection by the Engineer.

2. All hydrants shall stand plumb and shall have their nozzles parallel with or at right angles to the roadway, with pumper nozzle facing the roadway.

3. Hydrants shall be set to the established grade, with the centerline of the lowest nozzle at least 12-inches above the ground or as directed by the Engineer.

4. Hydrants shall be attached to the water main by the following method:

   a. For mains 16-inches and smaller, the isolation valve shall be attached to the main by connecting the valve to the hydrant tee.
   b. For mains 20-inches and larger, the isolation valve shall be attached to the main by providing an anchor coupling between the valve and welded outlet or tee.
   c. The isolation valve shall be attached to the hydrant by providing an anchor coupling or hydrant connector pipe between the valve and hydrant, if the hydrant and valve are less than two feet apart. Otherwise, provide ductile iron pipe with retainer glands on the hydrant and valve.

5. When a hydrant is set in soil that is pervious, drainage shall be provided at the base of the hydrant by placing coarse gravel or crushed stone mixed with coarse sand from the bottom of the trench to at least 6-inches above the drain port opening in the hydrant to a distance of 12-inches around the elbow.

6. When a hydrant is set in clay or other impervious soil, a drainage pit 2 x 2 x 2 feet shall be excavated below each hydrant and filled with coarse gravel or crushed stone mixed with coarse sand under and around the elbow of the hydrant and to a level of 6-inches above the drain port.

7. All hydrants shall be located as shown on the Drawings or as directed by the Engineer. Provide adequate resistance to avoid transmitting shock moment to the lower barrel and inlet connection. This shall be accomplished by pouring a concrete collar approximately 6-inches thick with a diameter of 24-inches at or near the ground line around the hydrant barrel.

8. All hydrants shall have fluorescent markings at curb. Marking shall not be the same color as markings denoting water meters.

J. Air Valve Vaults

1. Construct the vault or manhole as detailed on the Drawings.

2. The frame and cover or floor door shall be cast into the top slab. The floor door drain shall be piped to vault exterior.

3. Manholes shall be constructed such that their walls are plumb.

3.06 CONNECTIONS TO WATER MAINS

A. Make connections to existing pipe lines with tapping sleeves and valves, unless specifically shown otherwise on the Drawings.

B. Location: Before laying pipe, locate the points of connection to existing water mains and uncover as necessary for the Engineer to confirm the nature of the connection to be made.

C. Interruption of Services: Make connections to existing water mains only when system operations permit. Operate existing valves only with the specific authorization and direct supervision of the County.

D. Tapping Sleeves

1. Holes in the new pipe shall be machine cut, either in the field or at the factory. No torch cutting of holes shall be permitted.

2. Prior to attaching sleeve, the pipe shall be thoroughly cleaned, utilizing a brush and rag, as required.

3. Before performing field machine cut, the watertightness of the sleeve assembly shall be pressure tested. The interior of the assembly shall be filled with water. An air compressor shall be attached, which will induce a test pressure as specified in this Section. No leakage shall be permitted for a period of five minutes.

4. After attaching the sleeve to an existing main, but prior to making the tap, the interior of the assembly shall be disinfected. All surfaces to be exposed to potable water shall be swabbed or sprayed with a one percent hypochlorite solution.

E. Connections Using Solid Sleeves: Where connections are shown on the Drawings using solid sleeves, the Contractor shall furnish materials and labor necessary to make the connection to the existing pipe line.

F. Connections Using Couplings: Where connections are shown on the Drawings using couplings, the Contractor shall furnish materials and labor necessary to make the connection to the existing pipe line, including all necessary cutting, plugging and backfill.

3.07 THRUST RESTRAINT

A. Provide restraint at all points where hydraulic thrust may develop.

B. Retainer Glands: Provide retainer glands where shown on the Drawings and. Retainer glands shall be installed in accordance with the manufacturer's recommendations, particularly, the required torque of the set screws. The Contractor shall furnish a torque wrench to verify the torque on all set screws which do not have inherent torque indicators.

C. Harnessing

1. Provide harness rods only where specifically shown on the Drawings or directed by the Engineer.

2. Harness rods shall be manufactured in accordance with ASTM A 36 and shall have an allowable tensile stress of no less than 22,000 psi. Harness rods shall be hot dip galvanized or field coated with bitumastic before backfilling.

3. Where possible, harness rods shall be installed through the mechanical joint bolt holes. Where it is not possible, provide 90 degree bend eye bolts.

4. Eye bolts shall be of the same diameter as specified in AWWA C111 for that pipe size. The eye shall be welded closed. Where eye bolts are used in conjunction with harness rods, an appropriate size washer shall be utilized with a nut on each end of the harness rod. Eye bolts shall be of the same material and coating as the harness rods.

D. Thrust Collars: Collars shall be constructed as shown on the Drawings. Concrete and reinforcing steel shall meet the requirements as specified in this Section. The welded-on collar shall be designed to meet the minimum allowable load shown on the Drawings. The welded-on collar shall be attached to the pipe by the pipe manufacturer.

E. Concrete Blocking

1. Provide concrete blocking for all bends, tees, valves, and other points where thrust may develop, except where other exclusive means of thrust restraint are specifically shown on the Drawings.

2. Concrete shall be as specified in this Section.

3. Form and pour concrete blocking at fittings as shown on the Drawings and as directed by the Engineer. Pour blocking against undisturbed earth. Increase dimensions when required by over excavation.

3.08 INSPECTION AND TESTING

A. All sections of the water main subject to internal pressure shall be pressure tested in accordance with AWWA C600 and these Specifications. A section of main will be considered ready for testing after completion of all thrust restraint and backfilling.

B. Each segment of water main between main valves shall be tested individually.

C. Test Preparation

1. For water mains less than 24-inches in diameter, flush sections thoroughly at flow velocities, greater than 2.5 feet per second, adequate to remove debris from pipe and valve seats. For water mains 24-inches in diameter and larger, the main shall be carefully swept clean, and mopped if directed by the Engineer. Partially open valves to allow the water to flush the valve seat.

2. Partially operate valves and hydrants to clean out seats.

3. Provide temporary blocking, bulkheads, flanges and plugs as necessary, to assure all new pipes, valves and appurtenances will be pressure tested.

4. Before applying test pressure, air shall be completely expelled from the pipeline and all appurtenances. Insert corporation cocks at highpoints to expel air as main is filled with water as necessary to supplement automatic air valves. Corporation stops shall be constructed as detailed on the Drawings with a meter box.

5. Fill pipeline slowly with water. Provide a suitable pump with an accurate water meter to pump the line to the specified pressure.

6. The differential pressure across a valve or hydrant shall equal the maximum possible, but not exceed the rated working pressure. Where necessary, provide temporary backpressure to meet the differential pressure restrictions.

7. Valves shall not be operated in either the opening or closing direction at differential pressures above the rated pressure.

D. Test Pressure: Test the pipeline at 250 psi measured at the lowest point for at least two hours. Maintain the test pressure within 5 psi of the specified test pressure for the test duration. Should the pressure drop more than 5 psi at any time during the test period, the pressure shall be restored to the specified test pressure. Provide an accurate pressure gage with graduation not greater than 5 psi.

E. Leakage

1. Leakage shall be defined as the sum of the quantity of water that must be pumped into the test section, to maintain pressure within 5 psi of the specified test pressure for the test duration plus water required to return line to test pressure at the end of the test. Leakage shall be the total cumulative amount measured on a water meter.

2. The County assumes no responsibility for leakage occurring through existing valves.

F. Test Results: No test section shall be accepted if the leakage exceeds the limits determined by the following formula:

$$L = \frac{SD\,(P)^{1/2}}{133{,}200}$$

Where:
- L = allowable leakage, in gallons per hour
- S = length of pipe tested, in feet
- D = nominal diameter of the pipe, in inches
- P = average test pressure during the leakage test, in pounds per square inch (gauge)

As determined under Section 4 of AWWA C600.

If the water main section being tested contains lengths of various pipe diameters, the allowable leakage shall be the sum of the computed leakage for each diameter. The leakage test shall be repeated until the test section is accepted. All visible leaks shall be repaired regardless of leakage test results.

G. Completion: After a pipeline section has been accepted, relieve test pressure. Record type, size and location of all outlets on record drawings.

3.09 DISINFECTING PIPELINE

A. After successfully pressure testing each pipeline section, disinfect in accordance with AWWA C651 for the continuous-feed method and these Specifications.

B. Specialty Contractor: Disinfection shall be performed by an approved specialty contractor. Before disinfection is performed, the Contractor shall submit a written procedure for approval before being permitted to proceed with the disinfection. This plan shall also include the steps to be taken for the neutralization of the chlorinated water.

C. Chlorination

1. Apply chlorine solution to achieve a concentration of at least 25 milligrams per liter free chlorine in new line. Retain chlorinated water for 24 hours. Water shall be supplied from a temporary source protected by appropriate backflow prevention devices. Backflow preventer must be approved by the County prior to connection. Chlorine shall be injected no more than ten feet from the beginning of the new main.

2. Chlorine concentration shall be recorded at every outlet along the line at the beginning and end of the 24 hour period.

3. After 24 hours, all samples of water shall contain at least 10 milligrams per liter free chlorine. Re-chlorinate if required results are not obtained on all samples.

D. Disposal of Chlorinated Water: Reduce chlorine residual of disinfection water to less than one milligram per liter if discharged directly to a body of water or to less than two milligrams per liter if discharged onto the ground prior to disposal. Treat water with sulfur dioxide or other reducing chemicals to neutralize chlorine residual. Flush all lines until residual is equal to existing system.

E. Bacteriological Testing: After final flushing and before the water main is placed in service, the Contractor shall collect samples from the line and have tested for bacteriological quality in accordance with the rules of the Georgia Department of Natural Resources, Environmental Protection Division. One set of samples shall be collected from every 1,200 feet of water main, plus one set from each end of main and one set from each branch. Testing shall be performed by the County's water laboratory. Re-chlorinate lines until required results are obtained.

3.10 PROTECTION AND RESTORATION OF WORK AREA

A. General: Return all items and all areas disturbed, directly or indirectly by work under these Specifications, to their original condition or better, as quickly as possible after work is started.

1. The Contractor shall plan, coordinate, and prosecute the work such that disruption to personal property and business is held to a practical minimum.

2. All construction areas abutting lawns and yards of residential or commercial property shall be restored promptly. Backfilling of underground facilities, ditches, and disturbed areas shall be accomplished on a daily basis as work is completed. Finishing, dressing, and grassing shall be accomplished immediately thereafter, as a continuous operation within each area being constructed and with emphasis placed on completing each individual yard or business frontage. Care shall be taken to provide positive drainage to avoid ponding or concentration of runoff.

3. Handwork, including raking and smoothing, shall be required to ensure that the removal of roots, sticks, rocks, and other debris is removed in order to provide a neat and pleasing appearance.

4. The Department of Transportation's engineer shall be authorized to stop all work by the Contractor when restoration and cleanup are unsatisfactory and to require appropriate remedial measures.

B. Man-Made Improvements: Protect, or remove and replace with the Engineer's approval, all fences, walkways, mail boxes, pipe lines, drain culverts, power and telephone lines and cables, property pins and other improvements that may be encountered in the Work.

C. Cultivated Growth: Do not disturb cultivated trees or shrubbery unless approved by the Engineer. Any such trees or shrubbery which must be removed shall be heeled in and replanted under the direction of an experienced nurseryman.

D. Cutting of Trees: Do not cut trees for the performance of the work except as absolutely necessary. Protect trees that remain in the vicinity of the work from damage from equipment. Do not store spoil from excavation against the trunks. Remove excavated material stored over the root system of trees within 30 days to allow proper natural watering of the root system. Repair any damaged tree over 3-inches in diameter, not to be removed, under the direction of an experienced nurseryman. All trees and brush that require removal shall be promptly and completely removed from the work area and disposed of by the Contractor. No stumps, wood piles, or trash piles will be permitted on the work site.

E. Disposal of Rubbish: Dispose of all materials cleared and grubbed during the construction of the Project in accordance with the applicable codes and rules of the appropriate county, state and federal regulatory agencies.

F. Swamps and Other Wetlands

1. The Contractor shall not construct permanent roadbeds, berms, drainage structures or any other structures which alter the original topographic features within the easement.

2. All temporary construction or alterations to the original topography will incorporate measures to prevent erosion into the surrounding swamp or wetland. All areas within the easement shall be returned to their original topographic condition as soon as possible after work is completed in the area. All materials of construction and other non-native materials shall be disposed by the Contractor.

3. The Contractor shall provide temporary culverts or other drainage structures, as necessary, to permit the free migration of water between portions of a swamp, wetland or stream which may be temporarily divided by construction.

4. The Contractor shall not spread, discharge or dump any fuel oil, gasoline, pesticide, or any other pollutant to adjacent swamps or wetlands.

3.11 ABANDONING EXISTING WATER MAINS

A. General: Abandon in place all existing water main segments indicated on the Drawings to be abandoned. Perform abandonment after the new water main has been placed in service and all water main services have been changed over to the new main. Salvage for the County, existing fire hydrants, valve boxes, valve markers, and other materials indicated on the Drawings or located on water mains abandoned.

B. Capping and Plugging: Disconnect by sawing or cutting and removing a segment of existing pipe where cutting and capping or plugging is shown on the Drawings or directed by the Engineer. Provide a watertight pipe cap or plug and concrete blocking for restraint to seal off existing mains

indicated to remain in service. Seal ends of existing mains to be abandoned with a pipe cap or plug or with a masonry plug and minimum 6-inch cover of concrete on all sides around the end of the pipe. The Contractor shall be responsible for uncovering and verifying the size and material of the existing main to be capped or plugged.

C. Salvaging Materials: Salvage existing fire hydrants, valve boxes, valve markers and other materials as indicated on the Drawings and deliver salvaged items in good condition to the County's storage yard. Coordinate delivery and placement of salvaged materials in advance with the County.

E. Pavement Removal and Replacement: Perform any necessary pavement removal and replacement in accordance with the details on the Drawings and Section 02575 of these Specifications.

END OF SECTION NO. 01100

SECTION 01200
WATER SERVICE CONNECTIONS

PART 1 GENERAL

1.01 SCOPE

A. The work covered by this Section includes furnishing all materials and equipment, providing all required labor and installing water service connections and all appurtenant work according to these Specifications and/or to the Water Connection Detail as shown schematically on the Drawings.

B. Water meters are not to be furnished nor installed. However, the water meter connection must be compatible with the water meters currently used by the County.

C. No galvanized pipe or fittings shall be used on water services.

1.02 LOCATIONS

Locations shall be directed by the Engineer along the route of the water mains.

1.03 SERVICE COMPATIBILITY

It is the intent of these Specifications that the water service connections shall duplicate those presently being provided by the County in order to be compatible with their service maintenance procedures.

1.04 QUALITY CONTROL

All materials installed under this Section shall have the approval of the NSF for water services.

PART 2 PRODUCTS

2.01 MATERIALS AND CONSTRUCTION

A. Service Line

1. Copper Tubing: Tubing shall be ASTM B 88, Type K, rolled type. Fittings shall be brass with flare connection inlets and outlets, ANSI B16.26. Where required, adapters shall be brass. Unions shall be cast bronze. Joints shall be flare type. All fittings shall be of bronze construction with flare type connections.

2. Detection tape shall be as specified in Section 02665.

B. Meter Boxes

1. Meter boxes shall be cast iron painted black with a locking lid quad valve box. Meter boxes shall have nominal dimensions of 14-3/4 inches x 17 inches at bottom, 12 inches x 14 inches opening, and 12 inches tall. Meter box assemblies shall include one U-branch, four ball valves, two unions, two touch plugs with cotter pins, and two expansion connections. The entire assembly shall be configured to allow 7-1/2 inch meter and an ASSE 1024 dual check valve with a combined distance of 12-3/4 inches between inlet and outlet unions for the installation of the meter and ASSE 1024 dual check valve backflow preventer. The County will install the meter for domestic use or irrigation use after property owner applies for it.

2. Meter boxes shall be equal to Ford Meter Box Company, Double Gulf Box Part #LDG12U-243FULTTPNA (formerly Part #LDG12U-243-NA-TT).

C. Valves and Accessories

1. Ball valves shall be full port bronze, heavy duty type. Valve ends shall be threaded. Valves shall have a minimum 200 psi working pressure for water. Valves shall have stainless steel nut and handle. Valves shall be made in the U.S.A.

2. Corporation Cocks

a. Corporation cocks shall be ground key type, shall be made of bronze conforming to ASTM B61 or B62 and shall be suitable for the working pressure of the system. Ends shall be suitable for flare type joint. Coupling nut for connection to flared copper tubing shall conform to ANSI B16.26.
b. Corporation cocks shall be equal to Ford FB-600-4.

PART 3 EXECUTION

3.01 GENERAL

A. Immediately following completion of the water main system, the Contractor shall install water taps and meter boxes for each planned lot of the subdivision. All taps shall remain exposed at the main until the system has been successfully inspected, disinfected and tested for pressure.

B. Installation shall conform to the details for water service connections appearing schematically on the Drawings. Contractor shall provide any and all appurtenant work required to provide the intended water service connections.

C. The Contractor shall be prepared to make emergency repairs to the water system, if necessary, due to damage by others working in the area. In conjunction with this requirement, the Contractor shall furnish and have available at all times, a tapping machine, for the purpose of making temporary water service taps or emergency repairs to damaged water services. The Contractor shall furnish the County a phone number of an individual with the authority to initiate emergency repair work. This number must be provided prior to starting work on the Project.

3.02 TAPPING MAIN

A. All services connected to water main shall be through a 1-inch direct tap, regardless of service and meter size.

B. The water main shall be tapped with a tapping machine specifically designed for that purpose. The tap shall be a direct tap into the water main through a 1-inch brass corporation cock. All taps shall be supervised by the Fulton County Department of Development Services. All taps shall be made on the water main at a position so as not to be the top side of the pipe nor the bottom of the pipe. Distance between taps must be a minimum of 12-inches apart.

3.03 SERVICE LINES

A. Copper tubing between tap and water meter shall be one continuous length of pipe with no intermediate joints or connections. The service line shall be placed without sharp turns or bends from the water main to the meter box.

B. When meters are located on the opposite side of the street from the water main, new copper service lines shall be extended through a common 6-inch bore, Schedule 40 PVC conduit to the service side. Replacement of existing services may be by free bore without a casing.

C. Provide detection tape over all service lines.

D. 1-1/2-inch water services (meter box installation only) are made by utilizing a branch connection (wye) and three 3/4-inch direct taps. 3/4-inch copper tubing lines are joined at the branch connection at the meter box (meter box equal to CdR box 17 x 30 x 20 dimensions with water logo). Branch connections shall be equal to Ford Model #Y-28-246 with three 3/4-inch copper flare connections x 1-1/2-inch male iron pipe threads. A curb stop equal to Ford Model #B11-666W is threaded onto the 1-1/2-inch end of branch connection. Utilizing a 1-1/2-inch, 3-piece meter coupling equal to Ford Model #CF31-66 and meter coupling bushing Model #BIM-66 is threaded onto the opposite side of the curb stop.

E. 2-inch water services (meter box installation only) are made by utilizing a branch connection and three 1-inch direct water taps. 1-inch copper tubing lines are joined at the branch connection at the meter box (meter box equal to CdR box 24 x 36 x 24 dimensions with water logo). Branch connections shall be equal to Ford Model #Y-28-347 with three 1-inch copper flare connections x 2-inch male iron pipe threads. A curb stop equal to Ford Model #B11-777W is threaded onto the 2-inch end of branch connection. Utilizing a 2-inch, 3-piece meter coupling equal to Ford Model #C38-77 with bushing Model #BIM-77 is threaded onto the opposite side of the curb stop.

3.04 METER BOXES

A. The meter box shall be located parallel to the curb and centered within the space two feet behind the back of the curb. The meter box lid shall be set at finished grade of the road shoulder. The meter box shall be placed on a bed of gravel or crushed stone. The bed shall be 3-inches thick and extend 6-inches in all directions beyond the edge of the meter box. The box shall be carefully and uniformly backfilled to prevent distortion that would cause leaks. Meter boxes shall be located in pairs within two feet of the common property lines between the lots.

B. All water meters shall have fluorescent markings at curb. Markings shall not be the same color as markings denoting hydrants.

C. A 12-inch long threaded brass nipple shall be provided between the meter and a ball valve on the residence side of the meter box. The ball valve shall be located in an 8-inch diameter fiberglass valve box with lid. The valve box shall be placed on a blanket of granular crushed stone. The bed shall be 3-inches thick and extend 3-inches in all directions beyond the edge of the valve box.

3.05 RELOCATION OF SERVICE LINES

A. Relocate the existing meter to the new right-of-way limits and reconnect to the house service. Existing meters already located at the new right-of-way limits will not need relocating.

B. Before disconnecting the existing meter, the existing corporation in the main shall be closed. All existing meters and meter boxes shall be removed, if not already located at the right-of-way, reinstalled and reconnected as indicated on the Drawings.

C. Existing service lines shall be field-located by the Contractor. The Contractor shall be responsible for locating existing water meters, relocating the meters and meter boxes as necessary, and determining the existing size service line to reconnect the meters to the new water mains. All service lines installed under existing pavement, including streets, driveways and sidewalks, shall be installed by boring.

3.06 TRANSFER OF SERVICE

Immediately before connecting to the relocated or existing meter, all service lines shall be flushed to remove any foreign matter. Any special fittings required to reconnect the existing meter to the new copper service line, or the existing private service line, shall be provided by the Contractor. To minimize out of service time, the Contractor shall determine the connections to be made and have all the required pipe and fittings on hand before shutting off the existing service. After completing the connection, the new corporation stop shall be opened and all visible leaks shall be repaired.

3.07 MAINTENANCE AND REPAIRS

The tap, service line and meter box shall remain under the developer's maintenance responsibility for the same warranty period as the water main. The developer shall promptly repair any damage to the water system during the warranty period.

END OF SECTION NO. 01200

SECTION NO. 01300

BORE AND JACK CASINGS

PART 1 - GENERAL

1.01 SCOPE

A. The work covered by this Section includes furnishing all labor, materials and equipment required to bore and jack casings and to properly complete pipeline construction as described herein and/or shown on the Drawings.

B. Supply all materials and perform all work in accordance with applicable American Society for Testing and Materials (ASTM), American Water Works Association (AWWA), American National Standards Institute (ANSI) or other recognized standards. Latest revisions of all standards are applicable. If requested by the Engineer, submit evidence that manufacturer has consistently produced products of satisfactory quality and performance over a period of at least two years.

C. Bore carrier pipe shall be included in the unit price cost. No additional payments shall be made for the carrier pipe.

1.02 SUBMITTALS

A. If required by the County or Engineer, submit shop drawings, product data and experience.

B. Material Submittals: If required by the County or Engineer, the Contractor shall provide shop drawings and other pertinent specifications and product data as follows:

1. Shop drawings for casing pipe showing sizes and connection details.

2. Design mixes for concrete and grout.

3. Casing Spacers.

C. Experience Submittals: Boring and jacking casings is deemed to be specialty contractor work. If the Contractor elects to perform the work, the Contractor shall provide evidence as required by the General Conditions, if ordered by the County or Engineer. A minimum of five continuous years of experience in bore and jack casing construction is required of the casing installer. Evidence of this experience must be provided with the shop drawings for review by the Engineer.

1.03 STORAGE AND PROTECTION

All materials shall be stored and protected in accordance with the manufacturer's recommendations and as approved by the Engineer.

PART 2 - PRODUCTS

2.01 MATERIALS AND CONSTRUCTION

A. Casing

1. The casing shall be new and unused pipe. The casing shall be made from steel plate having a minimum yield strength of 35,000 psi. The steel plate shall also meet the chemical requirements of ASTM A 36.

2. The thicknesses of casing shown in paragraph B. below are minimum thicknesses. Actual thicknesses shall be determined by the casing installer, based on its evaluation of the required forces to be exerted on the casing when jacking. Any buckling of the casing due to jacking forces shall be repaired at no additional cost to the County.

3. The diameters of casing shown in paragraph B. below and shown on the Drawings are minimum. Larger casings, with the Engineer's approval, may be provided at no additional cost to the County, for whatever reasons the Contractor may decide, whether casing size availability, line and grade tolerances, soil conditions, etc.

B. Casing Sizes

UNDER RAILROADS		
Pipe Diameter, inches	**Casing Diameter, inches**	**Wall Thickness, inches (Uncoated)**
6	14	0.282
8	18	0.313
10	20	0.344
12	22	0.375
14	24	0.407
16	30	0.469
18	30	0.469
20	32	0.501
24	36	0.532
30	42	0.563
36	48	0.688
42	54	0.813
48	60	0.876
54	66	1.000
60	72	1.125

UNDER HIGHWAYS		
Pipe Diameter, inches	**Casing Diameter, inches**	**Wall Thickness, inches**
6	12	0.250
8	16	0.250
10	16	0.250
12	18	0.250
14	22	0.250
16	24	0.250
18	30	0.312
20	30	0.312
24	36	0.375
30	42	0.375
36	48	0.500
42	56	0.500
48	60	0.500
54	66	0.750
60	72	0.750

C. Casing Spacers: Casing spacers shall meet one of the following requirements:

1. Casing spacers shall be flanged, bolt-on style with a two-section stainless steel shell lined with a PVC liner, minimum 0.09-inch thick also having a hardness of 85-90 durometer. Runners shall be attached to stainless steel risers which shall be properly welded to the shell. The height of the runners and risers shall be manufactured such that the pipe does not float within the casing. Casing spacers shall be Cascade Waterworks Manufacturing Company or Advanced Products & Systems, Inc.

2. Casing spacers shall be a two-section, flanged, bolt on style constructed of heat fused PVC coated steel, minimum 14 gauge band and 10 gauge risers, with 2-inch wide glass reinforced polyester insulating skids, heavy duty PVC inner liner, minimum 0.09-inch thick having a hardness of 85-90 durometer, and all stainless steel or cadmium plated hardware shall be Pipeline Seal and Insulator, Inc.

D. Grout: Grout may be used for filling the void between the casing pipe and the carrier pipe. Cement shall conform to ASTM C 150, Type I or Type II. Grout shall have a minimum compressive strength of 100 psi attained within 24 hours.

E. Carrier Pipe: Carrier pipes shall meet requirements as specified in Section 02730 of these Specifications.

F. Surface Settlement Markers: Surface settlement markers within pavement areas shall be P.K. nails. Surface settlement markers within non-paved areas shall be wooden hubs.

2.02 EQUIPMENT

A. A cutting head shall be attached to a continuous auger mounted inside the casing pipe.

B. On casing pipe for gravity water over 60 feet in length, the installation equipment shall include a steering head and a grade indicator.

C. The steering head shall be controlled manually from the bore pit. The grade indicator shall consist of a water level attached to the casing which would indicate the elevation of the front end of the casing or some other means for grade indication approved by the Engineer.

PART 3 - EXECUTION

3.01 GENERAL

A. Interpretation of soil investigation reports and data, investigating the site and determination of the site soil conditions prior to bidding is the sole responsibility of the Contractor. Any subsurface investigation by the Bidder or Contractor must be approved by the appropriate authority having jurisdiction over the site.

B. Casing construction shall be performed so as not to interfere with, interrupt or endanger roadway surface and activity thereon, and minimize subsidence of the surface, structures, and utilities above and in the vicinity of the casing. Support the ground continuously in a manner that will prevent loss of ground and keep the perimeters and face of the casing, passages and shafts stable. The Contractor shall be responsible for all settlement resulting from casing operations and shall repair and restore damaged property to its original or better condition at no cost to the County.

C. Face Protection: The face of the excavation shall be protected from the collapse of the soil into the casing.

D. Casing Design: Design of the bore pit and required bearing to resist jacking forces are the responsibility of the Contractor. The excavation method selected shall be compatible with expected ground conditions. The lengths of the casing shown on the Drawings are the minimum lengths required. The length of the casing may be extended for the convenience of the Contractor, at no additional cost to the County. Due to restrictive right-of-way and construction easements, casing lengths less than the nominal 20 foot length may be necessary.

E. Highway Crossings

1. The Contractor shall be held responsible and accountable for the coordinating and scheduling of all construction work within the highway right-of-way and posting of appropriate permits.

2. Work along or across the highway department rights-of-way shall be subject to inspection by such highway department.

3. All installations shall be performed to leave free flows in drainage ditches, pipes, culverts or other surface drainage facilities of the highway, street or its connections.

4. No excavated material or equipment shall be placed on the pavement or shoulders of the roadway without the express approval of the highway department.

5. In no instance will the Contractor be permitted to leave equipment (trucks, backhoes, etc.) on the pavement or shoulder overnight. Construction materials to be installed, which are placed on the right-of-way in advance of construction, shall be placed in such a manner as not to interfere with the safe operation of the roadway.

6. The Contractor shall be responsible for providing the County sufficient information to obtain a blasting permit in a timely manner.

F. Railroad Crossings

1. The Contractor shall secure permission from the Railroad to schedule work so as not to interfere with the operation of the Railroad.

2. Additional insurance is required for each railroad crossing. The Contractor shall furnish the Railroad with such additional insurance as may be needed, cost of the same shall be borne by the Contractor.

3. All work on the Railroad right-of-way, including necessary support of tracks, safety of operations and other standard and incidental operation procedures may be under the supervision of the appropriate authorized representative of the Railroad affected and any decisions of this representative pertaining to construction and/or operations shall be final and construction must be governed by such decisions.

4. If, in the opinion of the Railroad, it becomes necessary to provide flagging protection, watchmen or the performance of any other work in order to keep the tracks safe for traffic, the Contractor shall coordinate such work and shall reimburse the Railroad, in cash, for such services, in accordance with accounting procedures agreed on by the Contractor and affected Railroad before construction is started.

5. No blasting shall be permitted within the Railroad right-of-way.

3.02 GROUNDWATER CONTROL

A. The Contractor shall control the groundwater throughout the construction of the casing.

B. Methods of dewatering shall be at the option and responsibility of the Contractor. Maintain close observation to detect settlement or displacement of surface facilities due to dewatering. Should settlement or displacement be detected, notify the Engineer immediately and take such action as necessary to maintain safe conditions and prevent damage.

C. When water is encountered, provide and maintain a dewatering system of sufficient capacity to remove water on a 24 hour basis keeping excavations free of water until the backfill operation is in progress. Dewatering shall be performed in such a manner that removal of soil particles is held to a minimum. Dewater into a sediment trap and comply with requirements specified in Section 02125 of these Specifications.

3.03 SAFETY

A. Provide all necessary bracing, bulkheads and shields to ensure complete safety to all traffic, persons and property at all times during the work. Perform the work in such a manner as to not permanently damage the roadbed or interfere with normal traffic over it.

B. Observe all applicable requirements of the regulations of the authorities having jurisdiction over this site. Conduct the operations in such a manner that all work will be performed below the level of the roadbed.

C. Perform all activities in accordance with the Occupational Safety and Health Act of 1970 (PL-596), as amended, applicable regulations of the Federal Government, OSHA 29CFR 1926 and applicable criteria of ANSI A10.16-81, "Safety Requirements for Construction of Tunnel Shafts and Caissons".

3.04 SURFACE SETTLEMENT MONITORING

A. Provide surface settlement markers for casings 24-inches in diameter and larger. Place marker as specified and as directed by the Engineer. The Contractor shall place settlement markers outside of pavement area, along the centerline of the casing at 20 foot intervals and offset 10 feet each way from the centerline of the casing. Markers shall also be placed at each shoulder of the roadway, at each edge of pavement, at the centerline of the pavement and at 10 and 25 feet in each direction from the centerline of the casing. Tie settlement markers to bench marks and indices sufficiently removed as not to be affected by the casing operations.

B. Make observations of surface settlement markers, placed as required herein, at regular time intervals acceptable to the Engineer. In the event settlement or heave on any marker exceeds 1-inch, the Contractor shall immediately cease work and using a method approved by the Engineer and the authority having jurisdiction over the project site, take immediate action to restore surface elevations to that existing prior to start of casing operations.

C. Take readings and permanently record surface elevations prior to start of dewatering operations and/or shaft excavation. The following schedule shall be used for obtaining and recording elevation readings: all settlement markers, once a week; all settlement markers within 50 feet of the casing heading, at the beginning of each day; more frequently at the Engineer's direction if settlement is identified. Make all elevation measurements to the nearest 0.01 foot.

D. The Contractor shall cooperate fully with jurisdictional personnel. Any settlement shall be corrected by, and at the expense of, the Contractor.

E. Promptly report any settlement and horizontal movement immediately to the Engineer and take immediate remedial action.

3.05 CASING INSTALLATION

A. Shaft

1. Conduct boring and jacking operations from a shaft excavated at one end of the section to be bored. Where conditions and accessibility are suitable, place the shaft on the downstream end of the bore.

2. The shaft shall be rectangular and excavated to a width and length required for ample working space. If necessary, sheet and shore shaft properly on all sides. Shaft sheeting shall be timber or steel piling of ample strength to safely withstand all structural loadings of whatever nature due to site and soil conditions. Keep preparations dry during all operations. Perform pumping operations as necessary.

3. The bottom of the shaft shall be firm and unyielding to form an adequate foundation upon which to work. In the event the shaft bottom is not stable, excavate to such additional depth as required and place a gravel sub-base or a concrete sub-base if directed by the Engineer due to soil conditions.

B. Jacking Rails and Frame

1. Set jacking rails to proper line and grade within the shaft. Secure rails in place to prevent settlement or movement during operations. The jacking rails shall cradle and hold the casing pipe on true line and grade during the progress of installing the casing.

2. Place backing between the heels of jacking rails and the rear of the shaft. The backing shall be adequate to withstand all jacking forces and loads.

3. The jacking frame shall be of adequate design for the magnitude of the job. Apply thrust to the end of the pipe in such a manner to impart a uniformly balanced load to the pipe barrel without damaging the joint ends of the pipe.

C. Boring and jacking of casing pipes shall be accomplished by the dry auger boring method without jetting, sluicing or wetboring.

D. Auger the hole and jack the casing through the soil simultaneously.

E. Bored installations shall have a bored-hole diameter essentially the same as the outside diameter of the casing pipe to be installed.

F. Execute boring ahead of the casing pipe with extreme care, commensurate with the rate of casing pipe penetration. Boring may proceed slightly in advance of the penetrating pipe and shall be made in such a manner to prevent any voids in the earth around the outside perimeter of the pipe. Make all investigations and determine if the soil conditions are such as to require the use of a shield.

G. As the casing is installed, check the horizontal and vertical alignment frequently. Make corrections prior to continuing operation. For casing pipe installations over 100 feet in length, the auger shall be removed and the alignment and grade checked at minimum intervals of 60 feet.

H. Any casing pipe damaged in jacking operations shall be repaired, if approved by the Engineer, or removed and replaced at Contractor's own expense.

I. Lengths of casing pipe, as long as practical, shall be used except as restricted otherwise. Joints between casing pipe sections shall be butt joints with complete joint penetration, single groove welds, for the entire joint circumference, in accordance with AWS recommended procedures. Prior to welding the joints, the Contractor shall ensure that both ends of the casing sections being welded are square.

J. The Contractor shall prepare a contingency plan which will allow the use of a casing lubricant, such as bentonite, in the event excessive frictional forces jeopardize the successful completion of the casing installation.

K. Once the jacking procedure has begun, it should be continued without stopping until completed, subject to weather and conditions beyond the control of the Contractor.

L. Care shall be taken to ensure that casing pipe installed by boring and jacking method will be at the proper alignment and grade.

M. The Contractor shall maintain and operate pumps and other necessary drainage system equipment to keep work dewatered at all times.

N. Adequate sheeting, shoring and bracing for embankments, operating pits and other appurtenances shall be placed and maintained to ensure that work proceeds safely and expeditiously. Upon completion of the required work, the sheeting, shoring and bracing shall be left in place, cut off or removed, as designated by the Engineer.

O. Trench excavation, all classes and type of excavation, the removal of rock, muck, debris, the excavation of all working pits and backfill requirements of Section 02225 are included under this Section.

P. All surplus material shall be removed from the right-of-way and the excavation finished flush with the surrounding ground.

Q. Grout backfill shall be used for unused holes or abandoned pipes.

R. Any replacement of carrier pipe in an existing casing shall be considered a new installation, subject to the applicable requirements of these Specifications.

3.06 FREE BORING

A. Where the Drawings indicate a pipeline is to be installed by boring without casing, the Contractor shall construct the crossing by the free bore method. The free bore method shall be accomplished by the dry auger boring method without jetting, sluicing, or wet boring.

B. The diameter of the free bore shall not exceed the pipe bell outside diameter or the pipe barrel outside diameter plus 1-inch, whichever is greater.

C. Free boring, where indicated on the Drawings, is to be performed at the Contractor's option. The Contractor may choose to construct the crossing by the conventional bore and jack casing methodology.

D. The Contractor shall be responsible for any settlement of the roadway caused by the free bore construction activities.

3.07 VENTILATION AND AIR QUALITY

Provide, operate and maintain for the duration of casing project a ventilation system to meet safety and OSHA requirements.

3.08 ROCK EXCAVATION

A. In the event that rock is encountered during the installation of the casing pipe which, in the opinion of the Engineer, cannot be removed through the casing, the Engineer may authorize the Contractor to complete the crossing by a method established in a change order.

B. At the Contractor's option, the Contractor may continue to install the casing and remove the rock through the casing at no additional cost to the County.

3.09 INSTALLATION OF PIPE

A. After construction of the casing is complete, and has been accepted by the Engineer, install the pipeline in accordance with the Drawings and Specifications.

B. Check the alignment and grade of the casing and prepare a plan to set the pipe at proper alignment, grade and elevation, without any sags or high spots.

C. The carrier pipe shall be held in the casing pipe by one of the following methods:

1. The carrier pipe shall be held in the casing pipe by the use of hardwood blocks spaced radially around the pipe and secured together so that they remain firmly in place. The spacing of such blocks longitudinally in the casing pipe shall not be greater than 10 feet.

2. The pipe shall be supported within the casing by use of casing spacers sized to limit radial movement to a maximum of 1-inch. Provide a minimum of one casing spacer per nominal length of pipe. Casing spacers shall be attached to the pipe at maximum 18 to 20 foot intervals.

D. Close the ends of the casing with 4-inch brick walls.

3.10 SHEETING REMOVAL

Remove sheeting used for shoring from the shaft and off the job site. The removal of sheeting, shoring and bracing shall be done in such a manner as not to endanger or damage either new or existing structures, private or public properties and also to avoid cave-ins or sliding in the banks.

3.11 INTERSTATE RESTORATION

When boring and jacking operations encroach upon the right-of-ways of the federal interstate system, the Contractor shall restore all screening trees with seedlings of like species.

END OF SECTION

SECTION NO. 01400

TRENCH EXCAVATION AND BACKFILL

PART 1 - GENERAL

1.04 SCOPE

A. The work under this Section consists of furnishing all labor, equipment and materials and performing all operations in connection with the trench excavation and backfill required to install the pipelines shown on the Drawings and as specified.

B. Excavation shall include the removal of any trees, stumps, brush, debris or other obstacles which remain after the clearing and grubbing operations, which may obstruct the work, and the excavation and removal of all earth, rock or other materials to the extent necessary to install the pipe and appurtenances in conformance with the lines and grades shown on the Drawings and as specified.

C. Backfill shall include the refilling and compaction of the fill in the trenches and excavations up to the surrounding ground surface or road grade at crossing.

D. The trench is divided into five specific areas:

1. Foundation: The area beneath the bedding, sometimes also referenced to as trench stabilization.

2. Bedding: The area above the trench bottom (or foundation) and below the bottom of the barrel of the pipe.

3. Haunching: The area above the bottom of the barrel of the pipe up to a specified height above the bottom of the barrel of the pipe.

4. Initial Backfill: The area above the haunching material and below a plane 12-inches above the top of the barrel of the pipe.

5. Final Backfill: The area above a plane 12-inches above the top of the barrel of the pipe.

E. The choice of method, means, techniques and equipment rests with the Contractor. The Contractor shall select the method and equipment for trench excavation and backfill depending upon the type of material to be excavated and backfilled, the depth of excavation, the amount of space available for operation of equipment, storage of excavated material, proximity of man-made improvements to be protected, available easement or right-of-way and prevailing practice in the area.

1.05 QUALITY ASSURANCE

A. Density: All references to "maximum dry density" shall mean the maximum dry density defined by ASTM D 698, except that for cohesionless, free draining soils "maximum dry density" shall mean the maximum index density as determined by ASTM D 4253. Determination of the density of foundation, bedding, haunching, or backfill materials in place shall meet with the requirements of ASTM D 1556, ASTM D 2922 or ASTM D 2937.

B. Sources and Evaluation Testing: Testing of materials to certify conformance with the Specifications shall be performed by an independent testing laboratory.

1.06 SAFETY

Perform all trench excavation and backfilling activities in accordance with the Occupational Safety and Health Act of 1970 (PL 91-596), as amended. The Contractor shall pay particular attention to the Safety and Health Regulations Part 1926, Subpart P "Excavation, Trenching & Shoring" as described in OSHA publication 2226.

PART 2 - PRODUCTS

2.01 TRENCH FOUNDATION MATERIALS

Crushed stone shall be utilized for trench foundation (trench stabilization) and shall meet the requirements of the Georgia Department of Transportation Specification 800.01, Group I (limestone, marble or dolomite) or Group II (quartzite, granite or gneiss). Stone size shall be between No. 57 and No. 4, inclusive.

2.02 BEDDING AND HAUNCHING MATERIALS

A. Unless specified otherwise, bedding and haunching materials shall be crushed stone as specified below.

B. Crushed stone utilized for bedding and haunching shall meet the requirements of the Georgia Department of Transportation Specification 800.01, Group I (limestone, marble or dolomite) or Group II (quartzite, granite or gneiss). Stone size shall be between No. 57 and No. 4, inclusive.

C. Filter Fabric - Non-Woven Type

1. Filter fabric associated with bedding shall be a UV stabilized, spunbonded, continuous filament, needlepunched, and polypropylene, nonwoven geotextile.

2. The fabric shall have an equivalent open size (EOS or AOS) of 120 - 70. The fabric shall also conform to the minimum property values listed in the following table:

Fabric Property	**Unit**	**Test Procedure**	**Average Value**	
			Typical	**Minimum**
Weight	oz/yd^2	ASTM D 3776	8.3	
Thickness	mils	ASTM D 1777	105	
Grab Strength	lbs.	ASTM D 4632	240	210
Grab Elongation	%	ASTM D 4632	>50	50
Tear Strength	lbs.	ASTM D 4533	100	85
Mullen Burst	psi	ASTM D 3786	350	320
Puncture Resistance	lbs.	ASTM D 4833	115	100
Permittivity	sec^{-1}	ASTM D 4491	1.7	

Water Permeability	cm/sec	ASTM D 4491	0.4	
Water Flow Rate	gpm/ft^2	ASTM D 4491	120	
UV Resistance (500 hrs)	%	ASTM D 4355	>85	
pH			2 - 13	

3. If ordered by the Engineer, the filter fabric manufacturer shall furnish the services of a competent factory representative to supervise and/or inspect the installation of pipe. This service will be furnished for a minimum of 10 days during initial pipe installation.

4. Filter fabric shall be equal to Polyfelt TS 700, Trevira 1125 or SuPac 7-MP.

2.03 INITIAL BACKFILL

A. Initial backfill material shall be crushed stone or earth materials as specified for bedding and haunching materials.

B. Earth materials utilized for initial backfill shall be suitable materials selected from materials excavated from the trench. Suitable materials shall be clean and free of rock larger than 2-inches at its largest dimension, organics, cinders, stumps, limbs, frozen earth or mud, man-made wastes and other unsuitable materials. Should the material excavated from the trench be saturated, the saturated material may be used as earth material, provided it is allowed to dry properly and it is capable of meeting the specified compaction requirements. When necessary, initial backfill materials shall be moistened to facilitate compaction by tamping. If materials excavated from the trench are not suitable for use as initial backfill material, provide select material conforming to the requirements of this Section.

2.04 FINAL BACKFILL

Final backfill material shall be general excavated earth materials, shall not contain rock larger than 2-inches at its greatest diameter, cinders, stumps, limbs, man-made wastes and other unsuitable materials. If materials excavated from the trench are not suitable for use as final backfill material, provide select material conforming to the requirements of this Section.

2.05 SELECT BACKFILL

Select backfill shall be materials that meet the requirements as specified for bedding, haunching, initial backfill or final backfill materials, including compaction requirements.

2.06 CONCRETE

Concrete for bedding, haunching, initial backfill or encasement shall have a compressive strength of not less than 3,000 psi, with not less than 5.5 bags of cement per cubic yard and a slump between 3 and 5-inches. Ready-mixed concrete shall be mixed and transported in accordance with ASTM C 94. Reinforcing steel shall conform to the requirements of ASTM A 615, Grade 60.

2.07 FLOWABLE FILL

Flowable fill, where required for trench backfill, shall meet the requirements of Georgia Department of Transportation Standard Specifications, Section 600 for Excavatable or Non-Excavatable type.

2.08 GRANULAR MATERIAL

Granular material, where required for trench backfill, shall be sand, river sand, crushed stone or aggregate, pond screenings, crusher run, recycled concrete, or other angular material. Granular material shall meet gradation requirements for Size No. 57 or finer.

PART 3 - EXECUTION

3.01 TRENCH EXCAVATION

A. Topsoil and grass shall be stripped a minimum of 6-inches over the trench excavation site and stockpiled separately for replacement over the finished grading areas.

B. Trenches shall be excavated to the lines and grades shown on the Drawings with the centerlines of the trenches on the centerlines of the pipes and to the dimensions, which provide the proper support, and protection of the pipe and other structures and accessories.

C. Trench Width for Pipelines

1. The sides of all trenches shall be vertical, as much as possible, to a minimum of one foot above the top of the pipe. Unless otherwise indicated on the Drawings, the maximum trench width shall be equal to the sum of the outside diameter of the pipe plus two feet. The minimum trench width shall be that which allows the proper consolidation of the haunching and initial backfill material.

2. Excavate the top portion of the trench to any width within the construction easement or right-of-way, which will not cause unnecessary damage to adjoining structures, roadways, pavement, utilities, trees or private property. Where necessary to accomplish this, provide sheeting and shoring.

3. Where rock is encountered in trenches, excavate to remove boulders and stones to provide a minimum of 6-inches clearance between the rock and any part of the pipe or manhole. The maximum allowable width of rock excavation for payment shall be based on a trench width equal to the outside diameter of the pipe barrel plus 18-inches, but the total allowable rock excavation width for payment will not be less than 36-inches.

4. Wherever the prescribed maximum trench width is exceeded, the Contractor shall use the next higher Class or Type of bedding and haunching as shown on the Drawings for the full trench width as actually cut. The excessive trench width may be due to unstable trench walls, inadequate or improperly placed bracing and sheeting which caused sloughing, accidental over-excavation, intentional over-excavation necessitated by the size of the Contractor's tamping and compaction equipment, intentional over-excavation due to the size of the Contractor's excavation equipment, or other reasons beyond the control of the Engineer or the County.

D. Depth

1. The trenches shall be excavated to the required depth or elevation, which allow for the placement of the pipe and bedding to the dimensions shown on the Drawings.

2. Where rock is encountered in trenches for pipelines, excavate to the minimum depth, which will provide clearance below the pipe barrel of 8-inches for pipe 21-inches in diameter and smaller and 12-inches for larger pipe and manholes. Remove boulders and stones to provide a

minimum of 6-inches clearance between the rock and any part of the pipe, manhole or accessory.

E. Excavated Materials

1. Excavated materials shall be placed adjacent to the work to be used for backfilling as required. Topsoil shall be carefully separated and lastly placed in its original location.

2. Excavated material shall be placed sufficiently back from the edge of the excavation to prevent caving of the trench wall, to permit safe access along the trench and not cause any drainage problems. Excavated material shall be placed so as not to damage existing landscape features or man-made improvements.

3.02 SHEETING, BRACING AND SHORING

A. Sheeting, bracing and shoring shall be performed in the following instances:

1. Where sloping of the trench walls does not adequately protect persons within the trench from slides or cave-ins.

2. In caving ground.

3. In wet, saturated, flowing or otherwise unstable materials. The sides of all trenches and excavations shall be adequately sheeted, braced and shored.

4. Where necessary to prevent damage to adjoining buildings, structures, roadways, pavement, utilities, trees or private properties which are required to remain.

5. Where necessary to maintain the top of the trench within the available construction easement or right-of-way.

B. In all cases, excavation protection shall strictly conform to the requirements of the Occupational Safety and Health Act of 1970, as amended.

C. Timber: Timber for shoring, sheeting, or bracing shall be sound and free of large or loose knots and in good, serviceable condition. Size and spacing shall be in accordance with OSHA regulations.

D. Steel Sheeting and Sheet Piling: Steel sheet piling shall be the continuous interlock type. The weight, depth and section modulus of the sheet piling shall be sufficient to restrain the loads of earth pressure and surcharge from existing foundations and live loads. Procedure for installation and bracing shall be so scheduled and coordinated with the removal of the earth that the ground under existing structures shall be protected against lateral movement at all times. The Contractor shall provide closure and sealing between sheet piling and existing facilities.

E. Trench Shield: A trench shield or box may be used to support the trench walls. The use of a trench shield does not necessarily preclude the additional use of bracing and sheeting. When trench shields are used, care must be taken to avoid disturbing the alignment and grade of the pipe or disrupting the haunching of the pipe as the shield is moved. When the bottom of the trench shield extends below the top of the pipe, the trench shield shall be raised in 6-inch increments with specified backfilling occurring simultaneously. At no time shall the trench shield be "dragged" with the bottom of the shield extending below the top of the pipe.

F. Remove bracing and sheeting in units when backfill reaches the point necessary to protect the pipe and adjacent property. Leave sheeting in place when in the opinion of the Engineer it cannot be

safely removed or is within three feet of an existing structure, utility, or pipeline. Cut off any sheeting left in place at least two feet below the surface.

G. Sheet piling within three feet of an existing structure or pipeline shall remain in place, unless otherwise directed by the Engineer.

3.03 TRENCH ROCK EXCAVATION

A. Definition of Trench Rock: Any materials in the original bed and in well-defined ledges which in the opinion of the Engineer, cannot be removed with pick, shovel, ditching machine, backhoe and other similar devices and which requires drilling, blasting, jack hammering, and bull pointing. Concrete and masonry structures to be removed which require drilling and blasting for removal, shall be considered rock unless otherwise provided elsewhere in the specifications. Boulders and detached pieces of rock, having volumes of more than one cubic yard, shall be considered rock.

B. Blasting: Exhaust other practical means of excavating prior to utilizing blasting as a means of excavation. However, if rock is encountered that requires removal by blasting, the Owner will require the Contractor to employ a Blasting Engineer to supervise the work. The Blasting Engineer must be approved the Engineer. It will be the Blasting Engineer's duty to monitor the blasting by use of seismograph, identify the areas where light charges must be used, conduct pre-blast and post-blast inspection of structures, including photographs or videos, and maintain a detailed written log, to advise the blaster of hole spacing and loading and to make seismic and concussion measurements where deemed necessary. The Contractor shall cooperate with the Blasting Engineer by uncovering and exposing pipe and structures for Instrument mounting. He shall also advise the Engineer when each shot is ready so that measurements may be taken if needed.

1. Blasting and Ordinances: Blasting operations shall be conducted in strict accordance with all existing ordinances and regulations and shall be done only with the Blasting Engineer's approval and under his supervision. All blasting shall be done during daylight hours. No loaded holes shall be left overnight.

2. Protection of Surroundings: All exposed structures shall be carefully protected from the effects of the blasts and all blasts shall be covered with blasting mats, dirt, heavy timers or other suitable material. The blasting shall be done by experienced workmen. Any damage done shall be promptly repaired by the Contractor at his own expense.

3. Storage of Blasting Supplies: All blasting supplies shall be stored in a manner approved by the State Fire Marshal, and watchman shall be stationed at all times at the place of storage. In no case shall caps or other exploders be kept at the place where dynamite or other explosives are stored.

4. Delay of Shots: All shots shall be delayed so as to minimize ground vibrations with maximum peak particle velocity, as measured at the nearest structure (pipe, etc.) not to exceed two (2) inches per second. The overpressure (noise or concussion) shall be minimized and sufficient stemming and matting shall be used to prevent overpressure in excess of 120 db. Precaution shall be taken to minimize flying rock and sufficient matting shall be used to prevent rocks from striking any person or structure.

5. Overpressure (concussion): Overpressure shall be recorded on direct-recording tape, preferably on the same recording of the vibration. The instrument used for measuring concussion shall be the type specifically designed for impact-type overpressure from blasting.

6. Records of Shots: The blaster shall maintain an accurate log of each shot, listing as a minimum the following: date, time, station number, manufacturer and type of explosive, method of firing, total weight of explosive, number of delays, number of holes, hole depth, maximum weight of explosive per delay, amount of stemmings, and type of matting.

C. Removal of Rock: Dispose of rock off site that is surplus or not suitable for use as riprap or backfill.
D. The Contractor shall notify the Engineer prior to any blasting. Additionally, the Contractor shall notify the Engineer and local fire department before any charge is set.

3.04 DEWATERING EXCAVATIONS

A. Dewater excavation continuously to maintain a water level two feet below the bottom of the trench.

B. Control drainage in the vicinity of excavation so the ground surface is properly pitched to prevent water running into the excavation.

C. There shall be sufficient pumping equipment, in good working order; available at all times, to remove any water that accumulates in excavations. Where the utility crosses natural drainage channels, the work shall be conducted in such a manner that unnecessary damage or delays in the prosecution of the work will be prevented. Provision shall be made for the satisfactory disposal of surface water to prevent damage to public or private property.

D. In all cases, accumulated water in the trench shall be removed before placing bedding or haunching, laying pipe, placing concrete or backfilling.

E. Where dewatering is performed by pumping the water from a sump, crushed stone shall be used as the medium for conducting the water to the sump. Sump depth shall be at least two feet below the bottom of the trench; Pumping equipment shall be of sufficient quantity and/or capacity to maintain the water level in the sump two feet below the bottom of the trench. Pumps shall be a type such that intermittent flows can be discharged. A standby pump shall be required in the event the operating pump or pumps clog or otherwise stop operation.

F. Dewater by use of a well point system when pumping from sumps does not lower the water level two feet below the trench bottom. Where soil conditions dictate, the Contractor shall construct well points cased in sand wicks. The casing, 6 to 10-inches in diameter, shall be jetted into the ground, followed by the installation of the well point, filling casing with sand and withdrawing the casing.

3.05 TRENCH FOUNDATION AND STABILIZATION

A. The bottom of the trench shall provide a foundation to support the pipe and its specified bedding. The trench bottom shall be graded to support the pipe and bedding uniformly throughout its length and width.

B. If, after dewatering as specified above, the trench bottom is spongy, or if the trench bottom does not provide firm, stable footing and the material at the bottom of the trench will still not adequately support the pipe, the trench will be determined to be unsuitable and the Engineer shall then order trench stabilization by directing the Contractor to over excavate trench bottom and fill with crushed stone.

C. Where the replacement of unsuitable material with crushed stone does not provide an adequate trench foundation, the trench bottom shall be excavated to a depth of at least two feet below the specified trench bottom. Place filter fabric in the bottom of the trench and support the fabric along the trench

walls until the trench stabilization, bedding, haunching and pipe have been placed at the proper grade. The ends of the filter fabric shall be overlapped above the pipe.

D. Where trench stabilization is provided, the trench stabilization material shall be compacted to at least 90 percent of the maximum dry density, unless shown or specified otherwise.

3.06 BEDDING AND HAUNCHING

A. Prior to placement of bedding material, the trench bottom shall be free of any water, loose rocks, boulders or large dirt clods.

B. Bedding material shall be placed to provide uniform support along the bottom of the pipe and to place and maintain the pipe at the proper elevation. The initial layer of bedding placed to receive the pipe shall be brought to the grade and dimensions indicated on the Drawings. All bedding shall extend the full width of the trench bottom. The pipe shall be placed and brought to grade by tamping the bedding material or by removal of the excess amount of the bedding material under the pipe. Adjustment to grade line shall be made by scraping away or filling with bedding material. Wedging or blocking up of pipe shall not be permitted. Applying pressure to the top of the pipe, such as with a backhoe bucket, to lower the pipe to the proper elevation or grade shall not be permitted. Each pipe section shall have a uniform bearing on the bedding for the length of the pipe, except immediately at the joint.

C. At each joint, excavate bell holes of ample depth and width to permit the joint to be assembled properly and to relieve the pipe bell of any load.

D. After the pipe section is properly placed, add the haunching material to the specified depth. The haunching material shall be shovel sliced, tamped, vigorously chinked or otherwise consolidated to provide uniform support for the pipe barrel and to fill completely the voids under the pipe, including the bell hole. Prior to placement of the haunching material, the bedding shall be clean and free of any water, loose rocks, boulders or dirt clods.

E. Gravity Waters and Accessories: Lay PVC pipe with minimum Class "B" bedding. Lay all other pipe with Class "C" bedding, unless shown or specified otherwise.

1. Class "A": Excavate the bottom of the trench flat at a minimum depth as shown on the Drawings, below the bottom of the pipe barrel. Lay pipe to line and grade on concrete block. Place concrete to the full width of the trench and to a height of one-fourth of the outside diameter of the pipe above the invert.

2. Class "B": Excavate the bottom of the trench flat at a minimum depth as shown on the Drawings, below the bottom of the pipe barrel. Place and compact bedding material to the proper grade. Haunching material shall then be carefully placed by hand and compacted to provide full support under and up to the centerline of the pipe.

3. Class "C": Excavate the bottom of the trench flat at a minimum depth as shown on the Drawings, below the bottom of the pipe barrel. Place and compact bedding material to the proper grade. Haunching material shall then be carefully placed by hand and compacted to provide full support under and up to a height of one-fourth the outside diameter of the pipe above the bottom of the pipe barrel.

4. Type 5: Excavate the bottom of the trench flat at a minimum depth as shown on the Drawings, below the bottom of the pipe barrel. Place and compact bedding material to the proper grade

before installing pipe. After the pipe has been brought to the proper grade, haunching material shall be carefully placed by hand and compacted to the top of the pipe.

F. Manholes: Excavate to a minimum of 12-inches below the planned elevation of the base of the manhole. Place and compact crushed stone bedding material to the required grade before constructing the manhole.

G. Excessive Width and Depth

1. Gravity Waters: If the trench is excavated to excess width, provide the bedding class with the next higher bedding factor. Type 5 Bedding may be used in lieu of Class "A" bedding, where Class "A" bedding is necessitated by excessive trench width.

2. If the trench is excavated to excessive depth, provide crushed stone to place the bedding at the proper elevation or grade.

H. Compaction: Bedding and haunching materials under pipe, manholes and accessories shall be compacted to a minimum of 90 percent of the maximum dry density, unless shown or specified otherwise.

3.07 INITIAL BACKFILL

A. Initial backfill shall be placed to anchor the pipe, protect the pipe from damage by subsequent backfill and ensure the uniform distribution of the loads over the top of the pipe.

B. Place initial backfill material carefully around the pipe in uniform layers to a depth of at least 12-inches above the pipe barrel. Layer depths shall be a maximum of 6-inches for pipe 18-inches in diameter and smaller and a maximum of 12-inches for pipe larger than 18-inches in diameter.

C. Backfill on both sides of the pipe simultaneously to prevent side pressures.

D. Compact each layer thoroughly with suitable hand tools or tamping equipment.

E. Initial backfill shall be compacted to a minimum 90 percent of the maximum dry density, unless shown or specified otherwise.

F. If materials excavated from the trench are not suitable for use as backfill materials, provide select backfill material conforming to the requirements of this Section for initial backfill.

3.08 CONCRETE ENCASEMENT FOR PIPELINES

Where concrete encasement is shown on the Drawings for pipelines, excavate the trench to provide a minimum of 12-inches clearance from the barrel of the pipe. Lay the pipe to line and grade on solid concrete blocks or solid bricks. In lieu of bedding, haunching and initial backfill, place concrete to the full width of the trench and to a height of not less than 12-inches above the pipe bell. Do not backfill the trench for a period of at least 24 hours after concrete is placed.

3.09 FINAL BACKFILL

A. Backfill carefully to restore the ground surface to its original condition.

B. The top 6-inches shall be topsoil obtained as specified in "Trench Excavation" of this Section.

C. Excavated material, which is unsuitable for backfilling, and excess material, shall be disposed of in a manner approved by the Engineer. Surplus soil may be neatly distributed and spread over the site, if approved by the Engineer, except that surplus soil shall not be distributed and spread over the site in areas under Corps of Engineers jurisdiction. If such spreading is allowed, the site shall be left in a clean and sightly condition and shall not affect pre-construction drainage patterns. Surplus rock from the trenching operations shall be removed from the site.

D. If materials excavated from the trench are not suitable for use as backfill materials, provide select backfill material conforming to the requirements of this Section.

E. After initial backfill material has been placed and compacted, backfill with final backfill material. Place backfill material in uniform layers, compacting each layer thoroughly as follows:

1. In 6-inch layers, if using light power tamping equipment, such as a "jumping jack"

2. In 12-inch layers, if using heavy tamping equipment, such as hammer with tamping feet

3. In 24-inch layers, if using a hydra-hammer

F. Settlement: If trench settles, re-fill, compact and grade the surface to conform to the adjacent surfaces.

G. Final backfill shall be compacted to a minimum 90 percent of the maximum dry density, unless specified otherwise.

3.10 ADDITIONAL MATERIAL

Where final grades above the pre-construction grades are required to maintain minimum cover, additional fill material will be as shown on the Drawings. Utilize excess material excavated from the trench, if the material is suitable. If excess excavated materials are not suitable, or if the quantity available is not sufficient, provide additional suitable fill material.

3.11 BACKFILL WITHIN RIGHT-OF-WAYS

Compact backfill underlying pavement and sidewalks, and backfill under dirt and gravel roads to a minimum 95 percent of the maximum dry density.

3.12 BACKFILL WITHIN GEORGIA DOT RIGHT-OF-WAY

Backfill within the Georgia DOT right-of-way shall meet the requirements stipulated in the "Utility Accommodation Policy and Standards", published by the Georgia Department of Transportation.

3.13 FLOWABLE FILL

Where flowable fill is required, excavate the trench to provide a minimum of 6-inches clearance on either side of the pipe barrel. Lay the pipe to line and grade on solid concrete blocks or bricks. In lieu of bedding, haunching and initial backfill, place flowable fill to the full width and depth of the trench. Flowable fill shall be protected from freezing for a period of 36 hours after placement. Minimum temperature of flowable fill at point of delivery shall be 50 degrees F. The Contractor shall provide steel plates over flowable fill in road locations.

3.14 COMPACTED GRANULAR MATERIAL

Where compacted granular material is required as initial and final backfill material, it shall be placed after bedding and haunching material specified elsewhere has been placed. Compacted granular material shall be compacted to a minimum 95 percent of the maximum dry density.

3.15 TESTING AND INSPECTION

A. The soils testing laboratory is responsible for the following:

1. Compaction tests in accordance with Article 1.02 of this Section.

2. Field density tests for each two feet of lift, one test site between each manhole, every 100 feet within road rights-of-way, or more frequently if ordered by the Engineer. The County shall direct where density tests will be performed along the Project route.

3. Inspecting and testing stripped site, subgrades and proposed fill materials.

B. The Contractor's duties relative to testing include:

1. Notifying laboratory of conditions requiring testing.

2. Coordinating with laboratory for field-testing.

3. Paying costs for additional testing performed beyond the scope of that required and for re-testing where initial tests reveal non-conformance with specified requirements.

4. Providing excavation as necessary for laboratory personnel to conduct tests.

C. Inspection

1. Earthwork operations, acceptability of excavated materials for bedding or backfill, and placing and compaction of bedding and backfill is subject to inspection by the Engineer.

2. Foundations and shallow spread footing foundations are required to be inspected by a geotechnical engineer, who shall verify suitable bearing and construction.

D. Comply with applicable codes, ordinances, rules, regulations and laws of local, municipal, state or federal authorities having jurisdiction.

END OF SECTION

SECTION NO. 01500

CLEARING AND GRUBBING

PART 1 - GENERAL

1.07 SCOPE

A. Clearing and grubbing includes, but is not limited to, removing from the Project site, trees, stumps, roots, brush, structures, abandoned utilities, trash, debris and all other materials found on or near the surface of the ground in the construction area and understood by generally accepted engineering practice not to be suitable for construction of the type contemplated. Precautionary measures that prevent damage to existing features to remain is part of the Work.

B. Clearing and grubbing operations shall be coordinated with temporary and permanent erosion and sedimentation control procedures.

1.08 QUALITY ASSURANCE

A. The Contractor shall comply with applicable codes, ordinances, rules, regulations and laws of local, municipal, state or federal authorities having jurisdiction over the Project. All required permits of a temporary nature shall be obtained for construction operations by the Contractor.

B. Open burning will not be allowed.

1.03 JOB CONDITIONS

A. Location of the Work: The area to be cleared and grubbed is shown schematically on the Drawings or specified below. It includes all areas designated for construction.

PART 2 - PRODUCTS

2.01 EQUIPMENT

A. The Contractor shall furnish equipment of the type normally used in clearing and grubbing operations including, but not limited to, tractors, trucks, loaders and root rakes.

PART 3 - EXECUTION

3.01 SCHEDULING OF CLEARING

A. The Contractor shall clear at each construction site only that length of the right-of-way, permanent or construction easement which would be the equivalent of one month's pipe laying.

B. The Engineer may permit clearing for additional lengths of the pipe line provided that temporary erosion and sedimentation controls are in place and a satisfactory stand of temporary grass is established. Should a satisfactory stand of grass not be possible, no additional clearing shall be permitted beyond that specified above.

C. A satisfactory stand of grass shall have no bare spots larger than one square yard. Bare spots shall be scattered and the bare area shall not comprise more than one percent of any given area.

3.02 CLEARING AND GRUBBING

A. Clear and grub the permanent easement or 10 feet, whichever is greater on each side of the pipeline before excavating. Remove all trees, growth, debris, stumps and other objectionable matter. Clear the construction easement or road right-of-way only if necessary.

B. Materials to be cleared, grubbed and removed from the Project site include, but are not limited to, all trees, stumps, roots, brush, trash, organic matter, paving, miscellaneous structures, houses, debris and abandoned utilities.

C. Grubbing shall consist of completely removing roots, stumps, trash and other debris from all graded areas so that topsoil is free of roots and debris. Topsoil is to be left sufficiently clean so that further picking and raking will not be required.

D. All stumps, roots, foundations and planking embedded in the ground shall be removed and disposed of. Piling and butts of utility poles shall be removed to a minimum depth of two feet below the limits of excavation for structures, trenches and roadways or two feet below finish grade, whichever is lower.

E. Landscaping features shall include, but are not necessarily limited to, fences, cultivated trees, cultivated shrubbery, property corners, man-made improvements, subdivision and other signs within the right-of-way and easement. The Contractor shall take extreme care in moving landscape features and promptly re-establishing these features. Fences shall be provided with a gate across the permanent easement. Existing structures shall be relocated such that they are off the easement.

F. Surface rocks and boulders shall be grubbed from the soil and removed from the site if not suitable as rip rap.

G. Where the tree limbs interfere with utility wires, or where the trees to be felled are in close proximity to utility wires, the tree shall be taken down in sections to eliminate the possibility of damage to the utility.

H. Any work pertaining to utility poles shall comply with the requirements of the appropriate utility.

I. All fences adjoining any excavation or embankment that, in the Contractor's opinion, may be damaged or buried, shall be carefully removed, stored and replaced. Any fencing that, in the Engineer's opinion, is significantly damaged shall be replaced with new fence material.

J. The Contractor shall exercise special precautions for the protection and preservation of trees, cultivated shrubs, sod, fences, etc. situated within the limits of the construction area but not directly within excavation and/or fill limits. The Contractor shall be held liable for any damage the Contractor's operations have inflicted on such property.

K. The Contractor shall be responsible for all damages to existing improvements resulting from Contractor's operations.

3.03 DISPOSAL OF DEBRIS

The debris resulting from the clearing and grubbing operation shall be hauled to a disposal site secured by the Contractor and shall be disposed of in accordance with all requirements of federal, state, county and municipal regulations. No debris of any kind shall be deposited in any stream or body of water, or in

any street or alley. No debris shall be deposited upon any private property except with written consent of the property owner. In no case shall any material or debris be left on the Project, shoved onto abutting private properties or buried on the Project.

END OF SECTION

SECTION NO. 02575

REMOVING AND REPLACING PAVEMENT

PART 1 - GENERAL

1.0 SCOPE

A. The work to be performed under this Section shall consist of removing and replacing existing pavement, sidewalks and curbs in paved areas where such have been removed for construction of utilities and appurtenances.

B. Existing pavement, sidewalks and curbs shall be replaced to the current County standards or to match existing, whichever is more stringent.

1.01 SUBMITTALS

If required by the County or Engineer, provide certificates stating that materials supplied comply with Specifications. Certificates shall be signed by the asphalt producer and the Contractor.

1.02 CONDITIONS

A. Weather Limitations

1. Apply bituminous tack coat only when the ambient temperature in the shade has been at least 50 degrees F for 12 hours immediately prior to application.

2. Do not conduct paving operations when surface is wet or contains excess of moisture which would prevent uniform distribution and required penetration.

3. Construct asphaltic courses only when atmospheric temperature in the shade is above 40 degrees F, when the underlying base is dry and when weather is not rainy.

4. Place base course when air temperature is above 35 degrees F and rising.

B. Grade Control: Establish and maintain the required lines and grades for each course during construction operations.

PART 2 - PRODUCTS

2.01 MATERIALS AND CONSTRUCTION

A. Graded Aggregate Base Course: Graded aggregate base course shall be of uniform quality throughout and shall meet the requirements of Section 815.01 of the Georgia Department of Transportation Standard Specifications.

B. Black Base: Black base course shall be of uniform quality throughout and shall conform to the requirements of Section 828 of the Georgia Department of Transportation Standard Specifications.

C. Bituminous Tack Coat: The bituminous tack coat shall conform to the requirements of Section 400 of the Georgia Department of Transportation Standard Specifications.

D. Surface Course: The surface course for all asphaltic concrete pavement shall conform to the requirements of Section 400, Type "E" of the Georgia Department of Transportation Standard Specifications.

E. Concrete: Provide concrete and reinforcing for concrete pavement or base courses in accordance with the requirements of the Georgia Department of Transportation Standard Specifications, Section 430. Concrete shall be of the strength classifications shown on the Drawings.

F. Special Surfaces: Where driveways or roadways are disturbed or damaged which are constructed of specialty type surfaces, e.g., brick or stone, these driveways and roadways shall be restored utilizing similar, if not original, materials. Where the nature of these surfaces dictate, a specialty contractor shall be used to restore the surfaces to their previous or better condition. Special surfaces shall be removed and replaced to the limits to which they were disturbed.

2.02 TYPES OF PAVEMENTS

A. General: All existing pavement removed, destroyed or damaged by construction shall be replaced with the same type and thickness of pavement as that existing prior to construction, unless otherwise directed by the Engineer. Materials, equipment and construction methods used for paving work shall conform to the Georgia Department of Transportation specifications applicable to the particular type required for replacement, repair or new pavements.

B. Aggregate Base: Aggregate base shall be constructed in accordance with the requirements of Section 310 of the Georgia Department of Transportation Standard Specifications. The maximum thickness to be laid in a single course shall be 6-inches compacted. If the design thickness of the base is more than 6-inches, it shall be constructed in two or more courses of approximate equal thickness. After the material placed has been shaped to line, grade and cross-section, it shall be rolled until the course has been uniformly compacted to at least 100 percent of the maximum dry density when Group 2 aggregate is used, or to at least 98 percent of maximum dry density when Group 1 aggregate is used.

C. Concrete Pavement: Concrete pavement or base courses shall be replaced with concrete. The surface finish of the replaced concrete pavement shall conform to that of the existing pavement. The surface of the replaced concrete base course shall be left rough. The slab depth shall be equivalent to the existing concrete pavement or base course, but in no case less than 6-inches thick. Transverse and longitudinal joints removed from concrete pavement shall be replaced at the same locations and to the same types and dimensions as those removed. Concrete pavements or concrete base courses shall be reinforced.

D. Asphaltic Concrete Base, Bituminous Tack Coat and Surface Course: Asphaltic concrete base, tack coat and surface course construction shall conform to Georgia Department of Transportation Standard Specifications, Section 400. The pavement mixture shall not be spread until the designated surface has been previously cleaned and prepared, is intact, firm, properly cured, dry and the tack coat has been applied. Apply and compact the base in maximum layer thickness by asphalt spreader equipment of design and operation approved by the Engineer. After compaction, the black base shall be smooth and true to established profiles and sections. Apply and compact the surface course in a manner approved by the Engineer. Immediately correct any high, low or defective areas by cutting out the course, replacing with fresh hot mix, and immediately compacting to conform and thoroughly bond to the surrounding area.

E. Surface Treatment Pavement: Bituminous penetration surface treatment pavement shall be replaced with a minimum thickness of 1-inch conforming to Section 424, Georgia Department of Transportation Standard Specifications.

F. Gravel Surfaces: Existing gravel road, drive and parking area replacement shall meet the requirements of graded aggregate base course. This surfacing may be authorized by the Engineer as a temporary surface for paved streets until replacement of hard surfaced pavement is authorized.

G. Temporary Measures: During the time period between pavement removal and complete replacement of permanent pavement, maintain highways, streets and roadways by the use of steel running plates anchored to prevent movement. The backfill above the pipe shall be compacted, as specified in Section 02225 of these Specifications, up to the existing pavement surface to provide support for the steel running plates. All pavement shall be replaced within seven calendar days of its removal.

PART 3 - EXECUTION

3.01 LOCATIONS FOR PAVEMENT REPLACEMENT

A. Type I Pavement Replacement (see Detail No. G-5) shall be used for pavement replacement for:

1. All point repairs;

2. All trenches, longitudinal or crossing installations, less than 12-inches wide;

3. All trenches for roadway crossings where the trench width at the top of the pipe is less than or equal to three feet, and the trench depth is less than or equal to eight feet.

4. At Contractor's option, in lieu of Type II and Type III Pavement Replacement.

B. Type II Pavement Replacement (see Detail No. G-6) shall be used for pavement replacement for:

1. All trenches for roadway crossings which do not meet the criteria for Type I Pavement Replacement;

2. All trench longitudinal installations which do not meet the criteria for Type III Pavement Replacement.

3. At Contractor's option, in lieu of Type III Pavement Replacement.

C. Type III Pavement Replacement shall be used only for longitudinal installations and where the trench width at the top of the pipe is greater than four feet.

D. "Graded Aggregate" pavement repair shall be used only where approved by the Engineer.

E. The Standard Utility Cuts Pavement Replacement (FC DWG No. 905) shall be used for all County asphalt roadways, and where applicable, as determined by the Engineer.

3.02 REMOVING PAVEMENT

A. General: Remove existing pavement as necessary for installing the pipe line and appurtenances.

B. Marking: Before removing any pavement, mark the pavement neatly paralleling pipe lines and existing street lines. Space the marks the width of the trench.

C. Breaking: Break asphalt pavement along the marks using pavement shearing equipment, jack hammers or other suitable tools. Break concrete pavement along the marks by scoring with a rotary saw and breaking below the score by the use of jack hammers or other suitable tools.

D. Machine Pulling: Do not pull pavement with machines until the pavement is completely broken and separated from pavement to remain.

E. Damage to Adjacent Pavement: Do not disturb or damage the adjacent pavement. If the adjacent pavement is disturbed or damaged, remove and replace the damaged pavement.

F. Sidewalk: Remove and replace any sidewalks disturbed by construction for their full width and to the nearest undisturbed joint.

G. Curbs: Tunnel under or remove and replace any curb disturbed by construction to the nearest undisturbed joint.

H. Cutting: Before removing any existing pavement, saw cut the pavement in full thickness.

3.03 REPLACING PAVEMENT

A. Preparation of Subgrade: Upon completion of backfilling and compaction of the backfill, arrange to have the compaction tested by an independent testing laboratory approved by the Engineer. After compaction testing has been satisfactorily completed, replace all pavements, sidewalks and curbs removed.

1. The existing street pavement or surface shall be removed along the lines of the work for the allowable width specified for the trench or structure. After the installation of the waterage or water works facilities and after the backfill has been compacted suitably, the additional width of pavement to be removed, as shown on the Drawings, shall be done immediately prior to replacing the pavement.

2. Trench backfill shall be compacted for the full depth of the trench as specified in Section 02225 of these Specifications.

3. Temporary trench backfill along streets and driveways shall include 6-inches of crushed stone or cherty clay as a temporary surfacing of the trenches. This temporary surface shall be maintained carefully at grade and dust-free by the Contractor until the backfill of the trench has thoroughly compacted in the opinion of the Engineer and permission is granted to replace the street pavement.

4. When temporary crushed stone or chert surface is considered by the Engineer to be sufficient surface for gravel pavement, the surface shall be graded smooth and to an elevation that will make the final permanent surfacing level with the adjacent surfacing that was undisturbed.

B. Pavement Replacement

1. Prior to replacing pavement, make a final cut in concrete pavement 12-inches back from the edge of the damaged pavement with a concrete saw. Remove asphalt pavement 12-inches back from the edge of the damaged pavement using pavement shearing equipment, jack hammers or other suitable tools. Pavement cuts shall be parallel or perpendicular to the road centerline as much as practical. On parallel installations the final cut shall be long and straight and consistent.

2. Replace all street and roadway pavement as shown on the Drawings. Replace driveways, sidewalks and curbs with the same material, to nearest existing undisturbed construction joint and to the same dimensions as those existing.

3. If the temporary crushed stone or chert surface is to be replaced, the top 6-inches shall be removed and the crushed stone surfacing for unpaved streets or the base for the bituminous surface shall be placed.

4. Following this preparation, the chert or crushed stone base shall be primed with a suitable bituminous material and surfaced with the proper type of bituminous surface treatment.

5. Where the paved surface is to be replaced with asphaltic concrete pavement, concrete pavement or with a concrete base and a surface course, the temporary chert or crushed stone surface and any necessary backfill material, additional existing paving and new excavation shall be removed to the depth and width shown on the Drawings. All edges of the existing pavement shall be cut to a straight, vertical edge. Care shall be used to get a smooth joint between the old and new pavement and to produce an even surface on the completed street. Concrete base slabs and crushed stone bases, if required, shall be placed and allowed to cure for three days before bituminous concrete surface courses are applied. Expansion joints, where applicable, shall be replaced in a manner equal to the original joint.

6. Where driveways or roadways, constructed of specialty type surfaces, e.g., brick or stone are disturbed or damaged, these driveways and roadways shall be restored utilizing similar materials. Where the nature of these surfaces dictate, a specialty contractor shall be used to restore the surfaces to their previous or better condition. Special surfaces shall be removed and replaced to the limits to which they were disturbed.

C. Pavement Resurfacing

1. Certain areas to be resurfaced are specified or noted on the Drawings. Where pavement to be resurfaced has been damaged with potholes, the Contractor shall remove all existing loose pavement material and fill the hole with black base, as specified, to the level of the existing pavement. After all pipe line installations are complete and existing pavement has been removed and replaced along the trench route, apply tack coat and surface course as specified.

2. Resurfacing limits shall be perpendicular to the road centerline. The limits of resurfacing shall be 10 feet beyond the edge of the pavement replacement on the main road being resurfaced, and to the point of tangency of the pavement on the side streets.

D. Pavement Striping: Pavement striping removed or paved over shall be replaced with the same type, dimension and material as original unless directed otherwise by the Engineer.

3.04 SIDEWALK AND CURB REPLACEMENT

A. Construction

1. All concrete sidewalks and curbs shall be replaced with concrete.

2. Preformed joints shall be 1/2-inch thick, conforming to the latest edition of AASHTO M 59 for sidewalks and AASHTO M 123 for curbs.

3. Forms for sidewalks shall be of wood or metal, shall be straight and free from warp, and shall be of sufficient strength, when in place, to hold the concrete true to line and grade without springing or distorting.

4. Forms for curbs shall be metal and of an approved section. They shall be straight and free from distortions, showing no vertical variation greater than 1/8-inch in 10 feet and no lateral variation greater than 1/4-inch in 10 feet from the true plain surface on the vertical face of the form. Forms shall be of the full depth of the structure and constructed such to permit the inside forms to be securely fastened to the outside forms.

5. Securely hold forms in place true to the lines and grades indicated on the Drawings.

6. Wood forms may be used on sharp turns and for special sections, as approved by the Engineer. Where wooden forms are used, they shall be free from warp and shall be the nominal depth of the structure.

7. All mortar and dirt shall be removed from forms and all forms shall be thoroughly oiled or wetted before any concrete is deposited.

B. When a section is removed, the existing sidewalk or curb shall be cut to a neat line, perpendicular to both the centerline and the surface of the concrete slab. Existing concrete shall be cut along the nearest existing construction joints; if such joints do not exist, the cut shall be made at minimum distances shown on the Drawings.

C. Existing concrete sidewalks and curbs that have been cut and removed for construction purposes shall be replaced with the same width and surface as the portion removed. Sidewalks shall have a minimum uniform thickness of 4-inches. The new work shall be neatly jointed to the existing concrete so that the surface of the new work shall form an even, unbroken plane with the existing surfaces.

D. The subgrade shall be formed by excavating to a depth equal to the thickness of the concrete, plus 2-inches. Subgrade shall be of such width as to permit the proper installation and bracing of the forms. Subgrades shall be compacted by hand tamping or rolling. Soft, yielding or unstable material shall be removed and backfilled with satisfactory material. Place 2-inches of porous crushed stone under all sidewalks and curbs and compacted thoroughly, then finish to a smooth, unyielding surface at proper line, grade and cross section.

E. Joint for Curbs

1. Joints shall be constructed to match existing and as specified. Construct joints true to line with their faces perpendicular to the surface of the structure and within 1/4-inch of their designated position.

2. Thoroughly spade and compact the concrete at the faces of all joints filling all voids.

3. Install expansion joint materials at the point of curve at all street returns. Install expansion joint material behind the curb at abutment to sidewalks and adjacent structures.

4. Place contraction joints every 10 feet along the length of the curbs and gutters. Form contraction joints using steel templates or division plates which conform to the cross section of the structure. Leave the templates in place until the concrete has set sufficiently to hold its shape, but remove them while the forms are still in place. Contraction joint templates or plates shall not extend below the top of the steel reinforcement or they shall be notched to permit the reinforcement to be continuous through the joint. Contraction joints shall be a minimum of 1-1/2-inches deep.

F. Expansion joints shall be required to replace any removed expansion joints or in new construction wherever shown on the Drawings. Expansion joints shall be true and even, shall present a satisfactory appearance, and shall extend to within 1/2-inch of the top of finished concrete surface.

G. Finishing

1. Strike off the surface with a template and finish the surface with a wood float using heavy pressure, after which, contraction joints shall be made and the surface finished with a wood float or steel trowel.

2. Finish the face of the curbs at the top and bottom with an approved finishing tool of the radius indicated on the Drawings.

3. Finish edges with an approved finishing tool having a 1/4-inch radius.

4. Provide a final broom finish by lightly combing with a stiff broom after troweling is complete.

5. The finished surface shall not vary more than 1/8-inch in 10 feet from the established grade.

H. Driveway and Sidewalk Ramp Openings

1. Provide driveway openings of the widths and at the locations indicated on the Drawings and as directed by the Engineer.

2. Provide sidewalk ramp openings as indicated on the Drawings, in conformance with the applicable regulations and as directed by the Engineer.

I. Concrete shall be suitably protected from freezing and excessive heat. It shall be kept covered with burlap or other suitable material and kept wet until cured. Provide necessary barricades to protect the work. All damage caused by people, vehicles, animals, rain, the Contractor's operations and the like shall be repaired by the Contractor, at no additional expense to the County.

3.05 MAINTENANCE

The Contractor shall maintain the surfaces of roadways built and pavements replaced until the acceptance of the Project. Maintenance shall include replacement, scraping, reshaping, wetting and rerolling as necessary to prevent raveling of the road material, the preservation of reasonably smooth surfaces and the repair of damaged or unsatisfactory surfaces, to the satisfaction of the Engineer. Maintenance shall include sprinkling as may be necessary to abate dust from the gravel surfaces.

3.06 SUPERVISION AND APPROVAL

A. Pavement restoration shall meet the requirements of the regulatory agency responsible for the pavement. Obtain agency approval of pavement restorations before requesting final payment.

B. Obtain the Engineer's approval of restoration of pavement, such as private roads and drives, that are not the responsibility of a regulatory agency.

C. Complete pavement restoration as soon as possible after backfilling.

D. Failure of Pavement: Should any pavement restoration or repairs fail or settle during the life of the Contract, including the bonded period, promptly restore or repair defects.

3.07 CLEANING

The Contractor shall remove all surplus excavation materials and debris from the street surfaces and rights-of-way and shall restore street, roadway or sidewalk surfacing to its original condition.

END OF SECTION

SECTION NO. 01700

SOIL EROSION AND SEDIMENT CONTROL

PART 1 - GENERAL

1.03 SCOPE

C. The work specified in this Section consists of providing, maintaining and removing temporary erosion and sedimentation controls.

D. Temporary erosion controls, include, but are not limited to, grassing, mulching, watering and reseeding on-site surfaces and spoil and borrow area surfaces, and providing interceptor ditches at ends of berms and at those locations which will ensure that erosion during construction will be either eliminated or maintained within acceptable limits as established by the Georgia Erosion and Sedimentation Act of 1975, as amended, Section 402 of the Federal Clean Water Act, and applicable codes, ordinances, rules, regulations and laws of local and municipal authorities having jurisdiction.

E. Temporary sedimentation controls include, but are not limited to, silt dams, traps, barriers, filter stone and appurtenances at the foot of sloped surfaces which will ensure that sedimentation pollution will be either eliminated or maintained within acceptable limits as established by the Federal Clean Water Act of 1987, as amended.

F. Land disturbance activity shall not commence until the Building Permit or Land Disturbance Permit (LDP) has been issued, which authorizes land disturbance activities.

G. Basic Principles

1. Conduct the earthwork and excavation activities in such a manner to fit the topography, soil type and condition.

2. Minimize the disturbed area and the duration of exposure to erosion elements.

3. Stabilize disturbed areas immediately.

4. Safely convey run-off from the site to an outlet such that erosion will not be increased off site.

5. Retain sediment on site that was generated on site.

6. Minimize encroachment upon watercourses.

H. Temporary Erosion and Sedimentation Control: In general, temporary erosion and sedimentation control procedures shall be directed toward:

1. Preventing soil erosion at the source.

2. Preventing silt and sediment from entering any waterway if soil erosion cannot be prevented.

3. Preventing silt and sediment from migrating downstream in the event it cannot be prevented from entering the waterway.

I. Permanent Erosion Control: Permanent erosion control measures shall be implemented to prevent sedimentation of the waterways and to prevent erosion of the Project site.

1.04 QUALITY ASSURANCE

A. General: Perform all work under this Section in accordance with all pertinent rules and regulations including, but not necessarily limited to, those stated herein and these Specifications.

B. Conflicts: Where provisions of pertinent rules and regulations conflict with these Specifications, the more stringent provisions shall govern.

PART 2 - PRODUCTS

2.02 TEMPORARY EROSION AND SEDIMENTATION CONTROL MATERIALS

A. Silt Fence: Silt fence shall meet the requirements of Section 171 - Temporary Silt Fence of the Department of Transportation, State of Georgia, Standard Specification, latest edition. Silt fence fabric must be on the Georgia DOT Qualified Product List.

B. Hay bales shall be clean, seedfree cereal hay type.

C. Netting shall be 1/2-inch, galvanized steel, chicken wire mesh.

D. Filter stone shall be crushed stone conforming to Georgia Department of Transportation Table 800.01H, Size Number 3.

E. Concrete block shall be hollow, non-load-bearing type.

F. Plywood shall be 3/4-inch thick exterior type.

G. Blanket and matting materials shall be in conformance with Georgia Department of Transportation Qualified Product List (QPL #62 for blankets, QPL #49 for matting).

H. Dirtbag shall be a non-woven bag which is sewn with a double needle machine using a high strength thread. The dirtbag seam shall have an average wide width strength per ASTM D-4884.

2.02 RIP RAP

A. Use sound, tough, durable stones resistant to the action of air and water. Slabby or shaley pieces will not be acceptable. Specific gravity shall be 2.0 or greater. Rip rap shall have less than 66 percent wear when tested in accordance with AASHTO T-96. Unless shown or specified otherwise, stone rip rap shall be Type 1 rip rap.

B. Type 1 Rip Rap: The largest pieces shall have a maximum volume of two cubic feet. At least 35 percent of the mass shall be comprised of pieces that weigh 125 pounds or more. The remainder shall be well graded down to the finest sizes. Rock fines shall comprise a maximum of 10 percent of the total mass. Rock fines are defined as material passing a No. 4 sieve. Rip rap size shall conform to Georgia Department of Transportation Section 805.01 Stone Dumped Rip Rap, Type 1.

C. Type 3 Rip Rap: The largest pieces shall have a maximum approximate volume of one cubic foot. At least 35 percent of the mass shall be comprised of pieces that weigh 15 pounds or more. The remainder shall be well graded down to the finest sizes. Rock fines shall comprise a maximum of 10 percent of the total mass. Rock fines are defined as material passing a No. 4 sieve. Rip rap size shall conform to Georgia Department of Transportation Section 805.01 Stone Dumped Rip Rap, Type 3.

D. 200 Pound Rip Rap: Minimum weight of individual stones shall be 200 pounds.

2.03 FILTER FABRIC

A. The filter fabric for use under rip rap shall be a monofilament, polypropylene woven fabric or a non-woven fabric meeting the specifications as established by Task Force 25 for the Federal Highway Administration. The filter fabric shall have an equivalent opening size (EOS) of 70.

B. Filter fabric under rip rap shall be equal to Mirafi, Amoco or Exxon.

2.04 CONCRETE

A. Concrete shall have a compressive strength of not less than 3,000 psi, with not less than 5.5 bags of cement per cubic yard and a slump between 3 and 5-inches. Ready-mixed concrete shall be mixed and transported in accordance with ASTM C 94. Reinforcing steel shall conform to the requirements of ASTM A 615, Grade 60.

PART 3 - EXECUTION

3.01 GENERAL

A. Provide all materials and promptly take all actions necessary to achieve effective erosion and sedimentation control in accordance with the Georgia Erosion and Sedimentation Act of 1975, as amended, local enforcing agency guidelines, and these Specifications.

3.02 TEMPORARY EROSION AND SEDIMENTATION CONTROL

A. Temporary erosion and sedimentation control procedures should be initially directed toward preventing silt and sediment from entering the creeks. The preferred method is to provide an undisturbed natural buffer, extending a minimal 25 feet from the top of the bank, to filter the run-off. Should this buffer prove infeasible due to construction activities being too close to the creek, or if the amount of sediment overwhelms the buffer, the Contractor shall place silt fences to filter the run-off and, if necessary, place permanent rip rap to stabilize the creek banks. When excavation activities disturb the previously stated preventative measures, or if they are not maintained, or whenever the construction activities cross the creeks, the check dams shall be installed downstream and within 200 feet of the affected area.

B. Silt dams, silt fences, traps, barriers, check dams, appurtenances and other temporary measures and devices shall be installed as indicated on the approved plans and working drawings, or as directed by Engineer, shall be maintained until no longer needed, and shall then be removed. Deteriorated hay bales and dislodged filter stone shall be replaced with new materials. Detention ponds, if constructed, shall be maintained in a condition ensuring that unfiltered water will not leave the pond.

C. Where permanent grassing is not appropriate, and where the Contractor's temporary erosion and sedimentation control practices are inadequate, the Engineer may direct the Contractor to provide temporary vegetative cover with fast growing seedings. Such temporary vegetative cover shall be

provided by the Contractor in compliance with the Manual for Erosion and Sedimentation Control in Georgia, specifically in the selection of species, planting dates and application rates for seedings, fertilizer and mulching, with the exception that kudzu shall not be permitted.

D. All erosion and sedimentation control devices, including check dams, shall be inspected by the Contractor at least weekly and after each rainfall occurrence and cleaned out and repaired by the Contractor as necessary.

E. Temporary erosion and sedimentation control devices shall be installed and maintained from the initial land disturbance activity until the satisfactory completion and establishment of permanent erosion control measures. At that time, temporary devices shall be removed.

3.03 PERMANENT EROSION CONTROL

A. Permanent erosion control shall include:

1. Restoring the work site to its original contours, unless shown otherwise on the Drawings or directed by the Engineer.

2. Permanent vegetative cover shall be performed in accordance with Article 3.04 of this Section.

3. Permanent stabilization of steep slopes and creeks shall be performed in accordance with Article 3.05 of this Section.

B. Permanent erosion control measures shall be implemented as soon as practical after the completion of pipe installation or land disturbance for each segment of the Project. In no event shall implementation be postponed when no further construction activities will impact that portion or segment of the Project. Partial payment requests may be withheld for those portions of the Project not complying with this requirement.

3.04 GRASSING

A. General

1. All references to grassing, unless noted otherwise, shall relate to establishing permanent vegetative cover as specified herein for seeding, fertilizing, mulching, etc.

2. When final grade has been established, all bare soil, unless otherwise required by the Contract Documents, shall be seeded, fertilized and mulched in an effort to restore to a protected condition. Critical areas shall be sodded as approved or directed by the Engineer.

3. Specified permanent grassing shall be performed at the first appropriate season following establishment of final grading in each section of the site.

4. Permanent grassing shall be of a perennial species.

B. Replant grass removed or damaged in residential areas using the same variety of grass and at the first appropriate season. Where sod is removed or damaged, replant such areas using sod of the same species of grass at the first appropriate season. Outside of residential or landscaped areas, grass the entire area disturbed by the work on completion of work in any area. In all areas, promptly establish successful stands of grass.

C. Grassing activities shall comply with the Manual for Erosion and Sediment Control in Georgia, specifically for the selection of species, with the exception that kudzu shall not be permitted, planting dates and application rates for seeding, fertilizer and mulching. Where permanent

vegetative cover (grassing) cannot be immediately established (due to season or other circumstances) the Contractor shall provide temporary vegetative cover. The Contractor must return to the site (at the appropriate season) to install permanent vegetation in areas that have received temporary vegetative cover.

3.05 RIP RAP

A. Unless shown otherwise on the Drawings, rip rap shall be placed where ordered by the Engineer, at all points where banks of streams or drainage ditches are disturbed by excavation, or at all points where natural vegetation is removed from banks of the streams or drainage ditches. Carefully compact backfill and place rip rap to prevent subsequent settlement and erosion. This requirement applies equally to construction along side a stream or drainage ditch as well as crossing a stream or drainage ditch.

B. When trenching across a creek, place rip rap a distance of 10 feet upstream and 10 feet downstream from the top of the trench excavation. Place rip rap across creek bottom, across creek banks and extend rip rap placement five feet beyond the top of each creek bank.

C. Preparation of Foundations: The ground surface upon which the rip rap is to be placed shall be brought in reasonably close conformity to the correct lines and grades before placement is commenced. Where filling of depressions is required, the new material shall be compacted with hand or mechanical tampers. Unless at creek banks or otherwise shown or specified, rip rap shall begin in a toe ditch constructed in original ground around the toe of the fill or the cut slope. The toe ditch shall be two feet deep in original ground, and the side next to the fill or cut shall have that same slope. After the rip rap is placed, the toe ditch shall be backfilled and the excess dirt spread neatly within the construction easement.

D. Placement of Filter Fabric: The surface to receive fabric shall be prepared to a relatively smooth condition free from obstructions, depressions and debris. The fabric shall be placed with the long dimension running up the slope and shall be placed to provide a minimum number of overlaps. The strips shall be placed to provide a minimum width of one foot of overlap for each joint. The filter fabric shall be anchored in place with securing pins of the type recommended by the fabric manufacturer. Pins shall be placed on or within 3-inches of the centerline of the overlap. The fabric shall be placed so that the upstream strip overlaps the downstream strip. The fabric shall be placed loosely so as to give and therefore avoid stretching and tearing during placement of the stones. The stones shall be dropped no more than three feet during construction. The fabric shall be protected at all times during construction from clogging due to clay, silts, chemicals or other contaminants. Any contaminated fabric or any fabric damaged during its installation or during placement of rip rap shall be removed and replaced with uncontaminated and undamaged fabric at no expense to the County.

E. Placement of Rip Rap

1. Rip rap shall be placed on a 6-inch layer of soil, crushed stone or sand overlaying the filter fabric. This 6-inch layer shall be placed to maximize the contact between the soil beneath the filter fabric and the filter fabric. Rip rap shall be placed with its top elevation conforming with the finished grade or the natural slope of the stream bank and stream bottom.

2. Stone rip rap shall be dumped into place to form a uniform surface and to the thickness specified on the Drawings. The thickness tolerance for the course shall be -6-inches and +12-inches. If the Drawings or the Bid do not specify a thickness, the course shall be placed to a thickness of not less than 18-inches.

END OF SECTION

SECTION NO. 01800

SHOP DRAWINGS, PRODUCT DATA, AND SAMPLES

1.01 GENERAL

A. The Contractor shall submit shop drawings, product data and samples as required by the Contract Documents or as requested by the Engineer.

B. Related Requirements:

1. General Conditions

1.02 SHOP DRAWINGS AND PRODUCT DATA

A. Submit shop drawings, product data, and/or samples covering the following items of work.

1. Paving and surfacing materials
2. Concrete mix design
3. Water pipe material
4. Ductile iron pipe
5. Precast concrete structures
6. Manhole frames, covers and flexible joints
7. Pumps
8. Pump motors
9. Pump controls
10. Electrical equipment
11. Building specialties
12. Valves
13. Chemical Feed and Storage Equipment
14. Structural steel
15. Miscellaneous metals
16. Paints, waterproofing
17. Hoisting Equipment
18. Instrumentation and SCADA Equipment
19. Flow measurement equipment
20. Piping layouts

B. Submit shop drawings and product data for any additional items of work as necessary for the successful completion of the project.

C. Shop drawings for any structure shall consist of such detailed plans as may be required for the prosecution of the work but not included in the Drawings. All necessary shop drawings shall be furnished by and through the Contractor. They shall include shop details, erection plans, and bending diagrams for reinforcing steel. Review by the Engineer must be obtained before any work involving these plans may be performed. Plans for falsework, centering and form work may also be required, and such cases shall be likewise subject to review by the Engineer.

1.03 CONTRACTOR'S RESPONSIBILITIES

A. Approve shop drawings, product data and samples prior to submission.

B. Determine and verify:

1. Field measurements and quantities.
2. Field construction criteria.
3. Materials of construction.
4. Catalog numbers and similar data.
5. Conformance with specifications.

C. Coordinate each submittal with requirements of the work of other submittals and of the Contract Documents.

D. Notify the Engineer in writing, at time of submission, of any deviations in the submittals from the requirements of the Contract Documents in order that, if the deviations are deemed acceptable, suitable action may be taken for proper adjustment. Otherwise, the Contractor will not be relieved of the responsibility for executing the work in accordance with the Drawings and Specifications even though such shop drawings have been reviewed by the Engineer.

E. Fabrication or work which requires submittals shall not begin until return of submittals after the Engineer's review.

F. Keep one set of approved and reviewed shop drawings on the job site at all times.

G. Produce the required shop drawings.

1.04 SUBMISSION REQUIREMENTS

A. Make submittals promptly in accordance with approved schedule, and in such sequence as not to cause delay in the work or in the work of any other contractor.

B. Number of submittals required

1. Shop drawings and product data: The Contractor shall submit seven copies of shop drawings and product data to the Engineer for review.

2. Samples: The Contractor shall submit two samples, with tags and properly identified, for each item requiring samples.

C. Each submission must be accompanied by a consecutively numbered letter of transmittal in duplicate, listing the contents of the submission and identifying each item by reference to Specification Section or Drawing number.

D. Submittals shall contain:

1. The date of submission and the dates of any previous submissions.

2. The Project title and number.

3. Contract identification.

4. The names of:

a. Contractor.

b. Supplier.

c. Manufacturer.

5. Identification of the product, with the Specification Section number.

6. Field dimensions, clearly identified as such.

7. Relation to adjacent or critical features of the work or materials.

8. Applicable standards, such as ASTM or Federal Specification numbers.

9. Identification of deviations from Contract Documents.

10. Identification of revisions on resubmittals.

11. An 8 inch by 3 inch blank space for Contractor and Engineer stamps.

12. Contractor's stamp shall be initialed or signed, certifying to approval of the submittal, to the verification of products, field measurements and field construction criteria, and to the coordination of the information within the submittal with the requirements of the work and of Contract Documents.

E. Catalog plates and other similar materials that cannot be conveniently labeled shall be bound in suitable covers bearing the identifying data.

F. Shop drawings shall be accompanied by all required certifications and other such supporting materials, and shall be submitted in such sequence or in such groups that all related items may be reviewed together. When shop drawings cannot be reviewed because the submission is not complete, or because related shop drawings or items have not been received, such shop drawings will be returned without action or will be held until the lacking materials are received. Any delay to the project resulting from the submission of incomplete shop drawing data shall be the responsibility of the Contractor and shall not constitute grounds for a project time extension.

G. Other special requirements may be listed in the Specifications and/or given to the Contractor at the preconstruction conference.

1.05 RESUBMISSION REQUIREMENTS

A. Make any corrections or changes to the submittals required by the Engineer and resubmit for review.

B. Shop drawings and product data:

1. Revise initial drawings or data, and resubmit as specified for the initial submittal.

2. Indicate any changes which have been made other than those requested by the Engineer.

C. Samples: Submit new samples as required for initial submittal.

1.06 DISTRIBUTION

A. Distribute shop drawings and product data which have been reviewed by the Engineer to:

1. Job site file.

2. Subcontractors.

3. Supplier or Manufacturer.

4. As requested by Engineer.

1.07 ENGINEER'S DUTIES

A. Review submittals with reasonable promptness and in accordance with the shop drawing schedule.

B. Affix stamp and initials or signature, and indicate whether the review is complete, or resubmittal is required.

C. Return submittals to the Contractor for distribution, or for resubmission.

1.08 REVIEW OF DRAWINGS

A. Review of shop drawings will be general, for conformance with the design concept of the project and compliance with the information given in the Contract Documents, and will not include verification of quantities, detailed dimensions, nor adjustments of dimensions to actual field conditions. Review shall not be construed as permitting any departure from the Contract requirements, as authorization of any increase in price, or as relieving the Contractor of the responsibility for any error in details, dimensions or otherwise that may exist.

B. Review by the Engineer of Contractor's shop drawings does not relieve the Contractor of any responsibility for accuracy of dimensions and details. The Contractor shall be responsible for agreement and conformity of his shop drawings with the Drawings and Specifications.

C. Allow a minimum of 30 days for the Engineer’s initial processing of each submittal. This time frame shall also apply to resubmitted shop drawings.

1.09 PAYMENT

A. The contract price shall include the cost of furnishing all shop drawings, product data and samples. No extra payment will be made for such drawings, data, and samples.

END OF SECTION

SECTION NO. 01900

CONTROL OF MATERIALS

PART I - GENERAL

1.01 WORK INCLUDED

A. The Contractor shall submit to the Engineer for review a list of the source of supply for all materials and equipment before orders are placed.

1.02 RELATED WORK

A Section 01310: Construction Schedule

B. Section 01340: Shop Drawings, Product Data and Samples

C. Section 01600: Material and Equipment

D. Section 01630: Substitutions and Product Options

1.03 REFERENCE STANDARDS

A. American Society of Testing Materials (ASTM)

B. American Concrete Institute (ACI)

PART 2 - MATERIALS

2.01 QUALITY OF MATERIALS

A. Suppliers of reinforcing steel, fabricated metal work, and metal castings may be required to submit guarantees of conformity with Drawings and Specifications.

B. Representative preliminary samples of the character and quantity prescribed may be submitted by the Contractor or manufacturer for examination and tested in accordance with the standard tests of materials.

C. Only materials conforming to the requirements of the Specifications and approved by the Engineer shall be used in the project.

D. All materials proposed to be used may be inspected or tested at any time during their preparation and use.

E. If it is found that the sources of supply which have been accepted do not furnish a uniform product, or if the product from any source proves unacceptable at any time, the Contractor shall furnish material from other acceptable sources.

F. No material which, after acceptance, has in any way become unfit for use shall be used in the work.

2.02 TESTING OF MATERIALS

A. Unless otherwise specified, standard tests of materials shall be in accordance with the Specifications and tests of the American Society of Testing Materials, and by a commercial testing laboratory approved by the Engineer.

B. Reports of tests shall promptly be furnished to the Engineer.

C. Tests shall be arranged by the Contractor with the cost of all tests paid for by the Contractor unless otherwise specified.

2.03 MATERIAL SCHEDULE AND TESTS

A. The following schedule of materials and the standard tests to which each is to be subjected is given for the Contractor's guidance, latest revision of standard specifications shall apply.

1. Portland Cement:

    a. Any quantity - Certificate of mill test to be furnished by producers of laboratory tests Made as per ASTM C- 150.

2. Sand: For use in Portland Cement Concrete:

    a. Any quantity - Tests to indicate conformity with ASTM C-33.

3. Stone and Gravel: For use in Portland Cement Concrete: (Coarse aggregate)

    a. Any quantity - Similar to Sand

4. Portland Cement Concrete: Cylinder Compression Tests of Concrete placed in the work, from three sets of three cylinders from the same batch of concrete for each day's placing of each class of concrete of each 50 cubic yards or fraction thereof. One set shall be broken at seven days, one at 28 days, and one set held in reserve.

5. Ductile Iron Pipe, and Special Castings:

    a. Any quantity - Certified tests furnished by foundry; field tests for dimensions, coating and holes; hammer test.

6. Structural Steel:

    a. Any quantity - Field inspection for rust, shape, and dimensions.

    b. 25 to 200 tons - Independent shop inspection and certified copies of mill tests.

    c. For structures and Buildings - See ASTM A-36.

7. Concrete Reinforcement Steel:

a. Up to 50 thousand pounds - Field inspection for rust, shape and dimensions.

b. 50 thousand pounds and up - Independent laboratory inspection as per ASTM A-615 and A-82

END OF SECTION NO. 01400

SECTION NO. 02000

TESTING LABORATORY SERVICES

PART 1- GENERAL

1.01 SCOPE

A. This Section includes testing which the Owner may require, beyond that testing required of the manufacturer, to determine if materials provided for the Project meet the requirements of these Specifications.

B. This work also includes all testing required by the Owner to verify work performed by the Contractor is in accordance with the requirements of these Specifications, i.e., concrete strength and slump testing, soil compaction. etc.

C. This work does not include materials testing required in various sections of these Specifications to be performed by the manufacturer, e.g., testing of pipe.

D. The testing laboratory or laboratories will be selected by the Owner. The testing laboratory or laboratories will work for the Owner.

1.02 PAYMENT FOR TESTING SERVICES

A. The cost of testing services required by the Contract to be provided by the Contractor shall be paid for by the Owner through their respective TASK ALLOWANCE.

B. The cost of additional testing services not specifically required in the Specifications, but requested by the Owner or Engineer, shall be paid for by the Owner through the TASK ALLOWANCE.

C. The cost of material testing described in various sections of these Specifications or as required in referenced standards to be provided by a material manufacturer, shall be included in the price bid for that item and shall not be paid for by the Owner.

D. The cost of retesting any item that fails to meet the requirements of these Specifications and/or false starts due to the Contractor's failure to properly schedule testing technicians shall be paid for by the Contractor. Retesting shall be performed by the testing laboratory working for the Owner.

1.03 LABORATORY DUTIES

A. Cooperate with the Owner, Engineer and Contractor.

B. Provide qualified personnel promptly on notice.

C. Perform specified inspections, sampling and testing of materials.

D. Comply with specified standards, ASTM, other recognized authorities, and as specified.

E. Ascertain compliance with requirements of the Contract Documents.

F. Promptly notify the Engineer and Contractor of irregularity or deficiency of work which are observed during performance of services.

G. Promptly submit three copies (two copies to the Engineer and one copy to the Contractor) of report of inspections and tests in addition to those additional copies required by the Contractor with the following information included:

1. Date issued

2. Project title and number

3. Testing laboratory name and address

4. Name and signature of inspector

5. Date of inspection or sampling

6. Record of temperature and weather

7. Date of test

8. Identification of product and Specification section

9. Location of Project

10. Type of inspection or test

11. Results of test

12. Observations regarding compliance with the Contract Documents

13. Perform additional services as required.

H. The laboratory is not authorized to release, revoke, alter or enlarge on requirements of the Contract Documents, or approve or accept any portion of the Work.

1.04 CONTRACTOR RESPONSIBILITIES

A. Cooperate with laboratory personnel, provide access to Work and/or manufacturer's requirements.

B. Provide to the laboratory, representative samples, in required quantities, of materials to be tested.

C. Furnish copies of mill test reports.

D. Furnish required labor and facilities to:

1. Provide access to Work to be tested;

2. Obtain and handle samples at the site;

3. Facilitate inspections and tests;

4. Build or furnish a holding box for concrete cylinders or other samples as required by the laboratory.

E. Notify the laboratory sufficiently in advance of operation to allow for the assignment of personnel and schedules of tests.

F. Laboratory Tests: Where such inspection and testing are to be conducted by an independent laboratory agency, the sample(s) shall be selected by such laboratory or agency, or the Engineer, and shipped to the laboratory by the Contractor at Contractor's expense.

G. Copies of all correspondence between the Contractor and testing agencies shall be provided to the Engineer.

1.05 QUALITY ASSURANCE

A. Testing shall be in accordance with all pertinent codes and regulations and with procedures and requirements of the American Society for Testing and Materials (ASTM).

1.06 PRODUCT HANDLING

A. Promptly process and distribute all required copies of test reports and related instructions to insure all necessary retesting or replacement of materials with the least possible delay in the progress of the Work.

1.07 FURNISHING MATERIALS

A. The Contractor shall be responsible for furnishing all materials necessary for testing.

1.08 CODE COMPLIANCE TESTING

A. Inspections and tests required by codes or ordinances or by a plan approval authority, and made by a legally constituted authority, shall be the responsibility of, and shall be paid for by the Contractor, unless otherwise provided in the Contract Documents.

1.09 CONTRACTOR'S CONVENIENCE TESTING

A. Inspection or testing performed exclusively for the Contractor's convenience shall be the sole responsibility of the Contractor.

1.10 SCHEDULES FOR TESTING

A. Establishing Schedule

1. The Contractor shall, by advance discussion with the testing laboratory selected by the Owner, determine the time required for the laboratory to perform its tests and to issue each of its findings, and make all arrangements for the testing laboratory to be on site to provide the required testing.

2. Provide all required time within the construction schedule.

B. When changes of construction schedule are necessary during construction, coordinate all such changes of schedule with the testing laboratory as required.

C. When the testing laboratory is ready to test according to the determined schedule, but is prevented from testing or taking specimens due to incompleteness of the Work, all extra costs for testing attributable to the delay will be back-charged to the Contractor and shall not be borne by the Owner.

1.11 TAKING SPECIMENS

A. Unless otherwise provided in the Contract Documents, all specimens and samples for tests will be taken by the testing laboratory or the Engineer.

1.12 TRANSPORTING SAMPLES

A. The Contractor shall be responsible for transporting all samples, except those taken by testing laboratory personnel, to the testing laboratory.

END OF SECTION

SECTION NO. 02100

INSPECTION OF WORK

1.01 ENGINEER'S INSPECTION

A. The Engineer shall have the right of access to and inspection of the work at all times. Materials, equipment and products shall be subject to the Engineer's review as specified herein.

B. The Engineer is responsible for general surveillance of the work on behalf of the Owner. The Engineer is not responsible for construction means, methods, sequences, or procedures or for safety precautions and programs in connection with the work. The Engineer is not responsible for supervision of the work and shall not give instruction to the Contractor's personnel as to methods of execution of the work. The Engineer is not responsible for the Contractor's failure to carry out the work in accordance with the Contract Documents.

1.02 CONTRACTOR'S DUTIES

A. The Contractor is responsible for all materials, equipment, methods, and procedures in execution of the work.

B. The Contractor shall correct to the satisfaction of the Engineer any work or material found to be defective or of deficient quality. Such corrections shall be made by the Contractor at no additional expense to the Owner.

1.03 RIGHT OF ENTRY

A. Representatives of Fulton County System, the Environmental Protection Division of the Georgia Department of Natural Resources, and the U.S. Department of Agriculture, Soil Conservation Services and others as may be identified by the Owner shall have access to the work wherever it is in preparation or progress. The Contractor shall provide proper facilities for such access and inspection.

END OF SECTION NO.

SECTION NO. 02200

CONSTRUCTION FACILITIES AND TEMPORARY CONTROLS

1.01 WORK INCLUDED

A. The work covered by this Section includes furnishing all labor, equipment, and materials required for temporary control of construction operations.

1.02 PUMPING

A. The Contractor shall furnish and operate pumping and appurtenant piping for dewatering, flow rerouting, or any similar purposes.

B. Pumping equipment which could disturb the public shall be operated only during a standard work day or as approved by the Engineer.

C. No discharge of raw sewage will be permitted to area water courses under any circumstances.

1.03 TEMPORARY FACILITIES

A. The Contractor shall provide all temporary facilities for water, heat, electric light, and power as required for the work during the entire period of operations. Contractor shall be responsible for payment of utilities costs for the duration of construction.

B. The Contractor shall provide temporary toilets as required and shall maintain them in a sanitary condition for the duration of the work and remove them at completion.

C. On or before the completion of the work, the Contractors shall remove all temporary facilities, together with all rubbish and trash, as directed by the Engineer.

1.04 STORAGE

A. The Contractor shall secure adequate storage to accommodate the required equipment, vehicles, and materials for the period of performance of the Contract.

1.05 CONTRACTOR'S OFFICE (NOT USED IN THIS CONTRACT)

A. The Contractor shall maintain an office convenient to the site of the work during the period of construction, at which he or his authorized agent shall be while work is in progress. The size of the office shall be as required for general use and to provide space for project meetings. Furnishings shall be provided as necessary. The office shall be provided with telephone service. Copies of the Contract, Drawings and Specifications and approved shop drawings shall be kept on file at this office for reference at any time. The Contractor's attention is directed to Section 01720, Project Record Documents of these Specifications. Notices, instructions, orders, directions or other communications from the Engineer, left at this office, shall be considered as received by the Contractor.

1.06 OWNER'S/ENGINEER'S FIELD (NOT USED IN THIS CONTRACT)

A. The Contractor shall furnish proper and adequate office space and facilities for the use of the Resident Engineer and Inspectors. A separate room shall be provided at least 12'x14' either in connection with the Contractor's office or in a separate structure, equipped with lights, heat air conditioning, desk, chair, and three drawer file cabinet.

1.07 CONSTRUCTION UTILITIES

A. The plant permanent lighting and power systems, may be utilized, if available, to provide light and power to construction offices, and for construction purposes. The Contractor shall pay all power company installation and use charges for the electrical energy utilized for the construction related power and light. The Contractor shall make his own arrangements at his own expenses for obtaining the water supply necessary for construction purposes, and he shall pay for all water consumed during construction.

1.08 TEMPORARY BUILDINGS (NOT USED IN THIS CONTRACT)

A. The Contractor may build temporary buildings or other structures for housing personnel, tools, machinery and supplies at approved sites, and shall maintain their surroundings in a sanitary and satisfactory manner at all times. On or before the completion of the work, all such structures shall be removed, together with all rubbish and trash, at the expense of the Contractor.

1.09 REMOVAL

A. The Contractor shall remove temporary facilities from the site of the work when so notified by the Engineer.

1.10 USE OF PREMISES

A. The Contractor shall not load nor permit any part of any structures to be loaded with a weight which will endanger its safety.

B. The Contractor shall confine his apparatus, the storage of materials and the operations of his workmen to the limits defined by laws, ordinances, permits or directions of the Engineer and shall not unduly encumber the premises with his materials.

C. The Contractor shall enforce the instructions of the Engineer regarding signs, advertisements, fire and smoking.

1.11 MAINTENANCE DURING CONSTRUCTION

A. The Contractor shall maintain, at his expense, the work during construction and until final acceptance of all work under the Contract. Continuous and effective work shall be prosecuted day by day, with adequate equipment and forces as required to keep the backfill, pavement, structures, pipe lines and other features in satisfactory and acceptable condition at all times.

B. In the event the Contractor fails to remedy any unsatisfactory situation, within twenty-four hours after receipt of written notice from the Engineer describing the unsatisfactory conditions, the Owner may be immediately proceed with adequate forces and

equipment to maintain the project, and the entire cost of this maintenance will be deducted from the monies otherwise due the Contractor under the Contract.

C. As an alternative to the above specified maintenance, the cost of all of the items which are not properly maintained may be deducted at the Contract Prices from the current partial payment request even if such items have been paid for in previous estimates.

1.12 CLEAN-UP AND DISPOSAL

A. At the end of each day's operation, the Contractor shall thoroughly clear the work site of all dirt or debris, and generally restore the site to an acceptable condition. Upon completion of the work, all excess material and rubbish shall be removed from the job site and disposal of. The surrounding construction area shall be left in as good a condition as that which existed prior to construction.

B. The Contractor shall transport and expeditiously dispose of all materials removed from the construction site. Disposal shall be at a site approved by the Engineer at no additional cost to the Owner, and in a manner consistent with all applicable codes and regulations.

1.13 TRAFFIC CONTROLS

A. The Contractor shall provide all signs, barriers, markers, and flagmen as required to maintain traffic.

B. The Contractor shall maintain traffic at all times, as practicable.

C. No road shall be closed to traffic without the approval of the Engineer.

D. Open trenches adjacent to traveled rights-of-way shall be properly barricaded, bridged, or otherwise maintained safe for traffic.

1.14 ACCESS ROADS

A. Streets, road and drives used by the Contractor for access to and from the site of the work shall be protected from damage caused by the normal traffic of vehicles used for or in connection with construction work. Any such damage done shall be repaired immediately and left in good condition at the end of the construction period. Any new access road construction shall be all weather and have drainage structures placed as shown or as required.

1.15 RESTORATION OF PAVING

A. The Contractor shall restore in a neat and acceptable manner all streets, roadways, or other areas where trenches have been opened.

1. Bituminous concrete, and prime and seal paving shall be restored so that the wearing surface and base course shall each be one and one-half times the original thickness.

2. Gravel surfacing shall be restored to its original thickness with a size gravel to match the existing, but in no case shall restored surfacing be less than 4 inches.

B. The Contractor shall restore concrete curbs, gutters, and walks to the size and shape as were existing. Damaged sections shall be replaced with complete new sections. Patching of damaged sections will not be permitted.

1.16 RESTORATION OF DEVELOPED PROPERTY

A. The Contractor shall replace or restore as nearly as practicable to their original condition, all clothes line posts, mailboxes, fences, lawns, hedges, shrubs and other such items which have been disturbed by the performance of the work.

B. The Contractor shall reseed, mulch and maintain trenches in lawn until 4 inch stand of grass has been produced. Seed shall be of the type to produce a stand of grass similar to the existing.

1.17 TREE AND PLANT PROTECTION

A. The Contractor shall preserve and protect existing trees and plants at the site which are designated to remain and those adjacent to the site.

B. Temporary barriers to a height of six feet shall be provided around each tree, or around each group of trees, or around plants to be protected.

C. The Contractor shall carefully supervise excavating, grading and filling, and subsequent construction operations to prevent damage.

D. The Contractor shall consult with the Engineer, and remove those roots and branches which interfere with construction.

E. The Contractor shall replace, or suitably repair, trees and plants designated to remain, which have been damaged or destroyed due to construction operation.

F. Reasonable care shall be taken during construction to avoid damage to vegetation. Ornamental shrubbery and tree branches shall be temporarily tied back, where appropriate, to minimize damage. Trees which receive damage to branches shall be trimmed of those branches to improve the appearance of the tree. Tree trunks receiving damage from equipment shall be treated with a tree dressing.

1.18 SOIL EROSION

A. The Contractor shall be required to take the necessary steps to minimize siltation and soil erosion during construction. This work shall consist of furnishing all labor, equipment, and materials and performing all operations in connections with the construction, installation, and maintenance of all erosion and pollution controls through the use of berms, sediment basins, mulches, hay erosion checks, ditches, debris filters, and other devices.

B. Temporary pollution control shall be coordinated with the permanent landscape program to assure economical, effective and continuous erosion control throughout the construction period.

END OF SECTION

SECTION NO. 02300

JOB SITE SECURITY

PART 1 - GENERAL

1.01 BARRICADES, LIGHTS and SIGNALS

A. The Contractor shall furnish and erect such barricades, fences, lights and danger signals and shall provide such other precautionary measures for the protection of persons or property and of the Work as necessary. Barricades shall be painted in a color that will be visible at night. From sunset to sunrise, the Contractor shall furnish and maintain at least one light at each barricade and sufficient numbers of barricades shall be erected to keep vehicles from being driven on or into any Work under construction.

B. The Contractor will be held responsible for all damages to the Work due to failure of barricades, signs and lights and whenever evidence is found of such damage, the Contractor shall immediately remove the damaged portion and replace it at the Contractor's cost and expense. The Contractor's responsibility for the maintenance of barricades, signs and lights shall not cease until the Project has been accepted by the Owner.

C. The Contractor shall employ, when necessary, watchmen on the work and shall, when necessary, erect and maintain such strong and suitable barriers and such light as will effectively prevent the happening of any accident to health and/or property. Lights shall be maintained for the hours between sunset to sunrise.

END OF SECTION

SECTION NO. 02400

DUST CONTROL

PART 1 - GENERAL

1.01 SCOPE

A. Limit blowing dust caused by construction by applying water or employing other appropriate means or methods to maintain dust control subject to the approval of the Owner. As a minimum, this may require the use of a water wagon twice a day to suppress dusty conditions.

10.2 PROTECTION OF ADJACENT PROPERTY

A. The Bidders shall visit the site and note the buildings, landscaping, roads, parking areas, and other facilities near the Work site that may be damaged by their operations. The Contractor shall make adequate provision to fully protect the surrounding area and will be held fully responsible for all damages resulting from Contractor's operations.

B. Protect all existing facilities (indoors and out) from damage by dust, spray or spills (indoors or out). Protect motors, bearings, electrical gear, instrumentation and building or other surfaces from dirt, dust, welding fumes, paint spray, spills or droppings causing wear, corrosion, malfunction, failure or defacement by enclosure, sprinkling or other dust palliatives, masking and covering, exhausting or containment.

END OF SECTION

SECTION NO. 02500

MATERIAL AND EQUIPMENT

PART 1 – GENERAL

1.01 SCOPE

A. These requirements for material and equipment apply, in general, to all equipment. They supplement the detailed equipment specifications. In case of conflict, the detailed material and equipment specification shall govern.

1.02 COORDINATION

A. The Contractor shall assume full responsibility for the coordination of the installation of all equipment, materials and products furnished under these Contract Documents. The Contractor shall be completely responsible for verification that all structures, piping and equipment components furnished by him and/or his subcontractors and suppliers are compatible.

1.03 PATENT ROYALTIES

A. All royalties and fees for patents covering materials, articles, apparatus, devices, or equipment shall be included in prices bid by the Contractor. Attention is directed to the requirements of the General Conditions concerning patents.

1.04 ERECTION AND SETTING

A. The Contractor shall take all measurements necessary to properly fit his work in the field, and he shall be governed by and responsible for those measurements and the proper working out of all details.

1.05 SPECIAL TOOLS AND ACCESSORIES

A. Equipment, including valves and hydrants, requiring periodic repair and adjustment shall be furnished complete with all special tools, instrument, and accessories required for proper maintenance. Equipment requiring special devices for lifting or handling shall be furnished complete with those devices.

1.06 PAINTING

A. Unless otherwise specified in the detailed specifications, all equipment including valves and hydrants shall be hop painted. Shop painting shall consist of preparing surfaces in accordance with the requirements of the manufacturer and applying the manufacturer's standard primer.

1.07 TRANSPORTATION HANDLING AND STORAGE

A. The Contractor shall be responsible for providing satisfactory storage facilities which are acceptable to the Engineer. In the event that satisfactory facilities cannot be provided on site, a satisfactory warehouse, acceptable to the Engineer, will be provided by the Contractor for such time until equipment, materials, and products can be accommodated at the site.

B. The Contractor shall be responsible for the maintenance and protection of all equipment, materials, and products placed in storage and shall bear all costs of storage, preparation for transportation, transportation, rehandling and preparation for installation.

END OF SECTION

SECTION NO. 02600

SUBSTITUTION AND PRODUCT OPTIONS

PART 1 - GENERAL

1.01 EQUIPMENT BIDS

A. Equipment bids shall be submitted in accordance with the procedures set forth in the Instruction to Bidders.

1.02 MATERIAL AND EQUIPMENT LIST

A. Within 30 days after Notice of Award, the Contractor shall submit for approval a complete list of materials and equipment proposed for use in connection with the project. Partial lists submitted from time to time will not be considered.

B. After any material or piece of equipment has been approved, no change in brand or make will be permitted unless satisfactory written evidence is presented to prove that the manufacturer cannot make scheduled delivery of approved material or that material delivered has been rejected and the substitution of a suitable material is an urgent necessity, or that other conditions have become apparent which indicates that approval of such other material is in the best interest of the Owner.

1.03 SUBMISSIONS FOR PRODUCT SUBSTITUTION

A. Product substitutions may be proposed by the Contractor in accordance with procedures outlined in the Instructions to Bidders, as indicated by the “or equal” phrase appearing throughout these Specifications, provided the substitute product is equal to or better than named products.

B. The Contractor shall furnish sufficient detailed information so that an evaluation can be made of any proposed “equal” product. This information shall be submitted with the shop drawings. Submission of inadequate or incomplete information as required to properly evaluate a proposed “or equal” product will be sufficient grounds for rejection. Submission shall include, but is not limited, to the following:

1. Performance capabilities.
2. Materials and construction details.
3. Manufacturer’s production and service capabilities.
4. Evidence of proven reliability.
5. Specific references to characteristics either superior or inferior to specified requirements.
6. Detailed estimate of operating and maintenance costs.

1.04 EVALUATION OF PRODUCT SUBSTITUTIONS

The information required to be furnished for evaluation of product substitutions will be evaluated as follows:

A. Performance capabilities, and materials and construction details will be evaluated based upon conformance with the Specifications. Products that do not conform to the Specifications will not be acceptable.

B. Manufacturer's production and service capabilities, and evidence of proven reliability will be acceptable if the following is furnished:

1. Written evidence that the manufacturer has not less than three years experience in the design and manufacture of the substitute product.

2. Written evidence of at least one application, of a type and size similar to the proposed substitute product, in successful operation for a period of at least one year.

3. In lieu of furnishing evidence of a manufacturer's experience and successful operation of an application of the product to be substituted, the Contractor may furnish a cash deposit or bond, which will guarantee replacement if the product furnished, does not satisfy the other requirements specified in this section. The amount of cash deposit or bond will be subject to the approval of the Engineer.

C. Specific reference to characteristics either superior or inferior to specified requirements will be evaluated based on their net effect on the project. Products with any characteristics inferior to those specified will not be acceptable unless offset by characteristics that, in the opinion of the Engineer, will cause the overall effect of the product on the project to be at least equal to that of those specified.

D. The detailed estimate of operating and maintenance costs will be evaluated based on comparison with similar data on the specified products. Proposed substitute products which have an operating and maintenance costs, which, in the opinion of the Engineer, exceeds that of the specified products, will not be considered equal and will not be acceptable.

1.05 REIMBURSEMENT

A. The Contractor shall be responsible for all costs associated with the product substitutions, which require major design changes to related, or adjacent work made necessary by the substitutions.

END OF SECTION

SECTION 01710

CLEANING

PART 1 - GENERAL

1.01 SCOPE

A. This Section covers the general cleaning which the Contractor shall be required to perform both during construction and before final acceptance of the Project unless otherwise shown on the Drawings or specified elsewhere in these Specifications.

1.02 QUALITY ASSURANCE

A. Daily, and more often if necessary, conduct inspections verifying that requirements of cleanliness are being met.

B. In addition to the standards described in this Section, comply with all pertinent requirements of governmental agencies having jurisdiction.

1.03 HAZARDOUS MATERIAL AND WASTE

A. The Contractor shall handle hazardous waste and materials in accordance with applicable local, state, and federal regulations. Waste shall also be disposed of in WFPA approved landfills as applicable.

B. The Contractor shall prevent accumulation of wastes which create hazardous conditions.

C. Burning or burying rubbish and waste materials on the site shall not be allowed.

D. Disposal of hazardous wastes or materials into sanitary or storm waters shall not be allowed.

1.04 DISPOSAL OF SURPLUS MATERIALS

A. Unless otherwise shown on the Drawings, specified or directed, the Contractor shall legally dispose off the site all surplus materials and equipment from demolition and shall provide suitable off-site disposal site, or utilize a site designated by the Owner.

PART 2 - PRODUCTS

2.01 CLEANING MATERIALS AND EQUIPMENT

A. Provide all required personnel, equipment and materials needed to maintain the specified standard of cleanliness.

2.02 COMPATIBILITY

A. Use only the cleaning materials, methods and equipment which are compatible with the surface being cleaned, as recommended by the manufacturer of the material or as approved by the Engineer.

PART 3 - EXECUTION

3.01 PROGRESS CLEANING

A. General

1. Do not allow the accumulation of scrap, debris, waste material and other items not required for construction of this Work.

2. At least each week, and more often if necessary, completely remove all scrap, debris and waste material from the job site.

3. Provide adequate storage for all items awaiting removal from the job site, observing all requirements for fire protection and protection of the environment.

B. Site

1. Daily and more often if necessary, inspect the site and pick up all scrap, debris and waste material. Remove all such items to the place designated for their storage.

2. Re-stack materials stored on site weekly.

3. At all times maintain the site in a neat and orderly condition which meets the approval of the Engineer.

C. Structures

1. Weekly and more often if necessary, inspect the structures and pick up all scrap, debris and waste material. Remove all such items to the place designated for their storage.

2. Weekly and more often if necessary, sweep all interior spaces clean. "Clean", for the purpose of this subparagraph, shall be interpreted as meaning free from dust and other material capable of being removed by using a hand-held broom.

3. As required preparatory to installation of successive materials, clean the structures or pertinent portions as recommended by the manufacturer of the successive material.

4. Following the installation of finish floor materials, clean the finish floor daily. "Clean", for the purpose of this paragraph, shall be interpreted as meaning free from all foreign material which, in the opinion of the Engineer, may be injurious to the finish floor material.

5. Schedule cleaning operation so that dust and other contaminants resulting from cleaning operations will not fall on wet, recently painted surfaces.

3.02 FINAL CLEANING

A. Definitions: Unless otherwise specifically specified, "clean" for the purpose of this Article shall be interpreted as the level of cleanliness generally provided by commercial building maintenance subcontractors using commercial quality building maintenance equipment and materials.

B. General: Prior to completion of the Work, remove from the job site all tools, surplus materials, equipment, scrap, debris and waste. Conduct final progress cleaning as described in 3.01 above.

C. Site: Unless otherwise specifically directed by the Engineer, hose down all paved areas on the site and all sidewalks; rake clean other surfaces of the grounds. Completely remove all resultant debris.

D. Structures

1. Remove all traces of soil, waste material, splashed material, and other foreign matter to provide a uniform degree of exterior cleanliness. Visually inspect all exterior surfaces and remove all traces of soil, waste material, and other foreign matter. Remove all traces of splashed materials from adjacent surfaces. If necessary to achieve a uniform degree of exterior cleanliness, hose down the exterior of the structure. In the event of stubborn stains not removable with water, the Engineer may require light sandblasting or other cleaning at no additional cost to the Owner.

2. Visually inspect all interior surfaces and remove all traces of soil, waste material, smudges and other foreign matter. Remove all paint droppings, spots, stains and dirt from finished surfaces.

3. Clean all glass inside and outside.

4. Polish all surfaces requiring the routine application of buffed polish. Provide and apply polish as recommended by the manufacturer of the material being polished.

E. Post-Construction Cleanup: All evidence of temporary construction facilities. haul roads, work areas, structures, foundations of temporary structures, stockpiles of excess or waste materials, or any other evidence of construction, as directed by the Engineer.

F. Restoration of Landscape Damage: Any landscape feature damaged by the Contractor shall be restored as nearly as possible to its original condition at the Contractor's expense. The Engineer will decide what method of restoration shall be used.

G. Timing: Schedule final cleaning as approved by the Engineer to enable the Owner to accept the Project.

3.03 CLEANING DURING OWNER'S OCCUPANCY

A. Should the Owner occupy the Work or any portion thereof prior to its completion by the Contractor and acceptance by the Owner, responsibilities for interim and final cleaning of the occupied spaces shall be as determined by the Engineer in accordance with the Supplementary Conditions of the Contract Documents.

END OF SECTION NO. 01 710

SECTION 01720

PROJECT RECORD DOCUMENTS

1.01 GENERAL

A. The Contractor shall maintain at the site for the Owner one record copy of:

1. Drawings.
2. Specifications.
3. Addenda.
4. Change orders and other modifications to the Contract.
5. Engineer field orders or written instructions.
6. Approved shop drawings, product data, and samples.
7. Field test records.

B. Related Requirements:

1. Section 01050: Construction Layout
2. Section 01200: Project Meetings
3. Section 01340: Shop Drawings, Product Data, and Samples
4. Section 01500: Construction Facilities and Temporary Controls

1.02 MAINTENANCE OF DOCUMENTS AND SAMPLES

A. The Contractor shall store record documents and samples in the field office apart from documents used for construction.

1. Provide files and racks for storage of documents.
2. Provide locked cabinet or secure storage space for storage of samples.

B. Documents and samples shall be filed in accordance with Data Filing Format of the Uniform Construction Index.

C. Documents shall be maintained in a clean, dry, legible condition and in good order. Record documents shall not be used for construction purposes.

D. Documents and samples shall be available at all times for inspection by the Engineer.

1.03 MARKING DEVICES

A. The Contractor shall provide felt tip marking pens for recording information in the color code designated by the Engineer.

1.04 RECORDING

A. Each document shall be labeled "PROJECT RECORD" in large printed letters.

B. Record information shall be kept current with construction progress.

C. Record Drawings:

1. The Contractor shall keep an accurate record of variations between the work actually provided and that shown on the Contract Drawings. The representation of such variations shall conform to standard drafting practice and shall include such supplementary notes, legends and details as may be necessary for legibility and clear portrayal of the construction.

2. Do not conceal any work until required information is recorded.

3. Following the construction of the project, Contractor shall provide a Record Survey performed by a Registered Professional Land Surveyor. Survey shall accurately reflect installed location, depth, pipe size and other pertinent details. Cost for the survey shall be included in the price bid for pipe and no separate payment will be made for this survey.

1.05 SUBMITTAL

A. Sketches showing the "Record" information shall be provided monthly to the Engineer and submitted with the partial pay request.

B. The Contractor shall have the complete set of Record Documents certified as to their completeness and correctness by the Resident Inspector and shall deliver the certified Record Documents to the Engineer with the final pay estimate.

C. Each submittal shall be accompanied by a transmittal letter in duplicate, containing:

1. Date.
2. Project title and number.
3. Contractor's name and address.
4. Title and number of each Record Document.
5. Signature of the Contractor or his authorized representative.

END OF SECTION NO. 01 720

SECTION NO. 01740

WARRANTIES AND BONDS

PART 1 - GENERAL

1.01 PROJECT MAINTENANCE AND WARRANTY

A. Maintain and keep in good repair the Work covered by these Drawings and Specifications until acceptance by Owner.

B. The Contractor shall warrant for a period of one year from the date of Owner's written acceptance of certain segments of the Work and /or Owner's written final acceptance of the Project, as defined in the Contract Documents, that the completed Work is free from all defects due to faulty products or workmanship and the Contractor shall promptly make such corrections as may be necessary by reason of such defects. The Owner will give notice of observed defects with reasonable promptness. In the event that the Contractor should fail to make such defects, the Owner may do so and charge the Contractor the cost thereby incurred. The Performance Bond shall remain in full force and effect throughout the warranty period.

C. The Contractor shall not be obligated to make replacements which become necessary because of ordinary wear and tear, or as a result of improper operation or maintenance, or as a result of improper work or damage by another Contractor or the Owner, or to perform any work which is normally performed by a maintenance crew during operation.

D. In the event of multiple failures of major consequences prior to the expiration of the one year warranty described above, the affected unit shall be disassembled, inspected and modified or replaced as necessary to prevent further occurrences. All related components which may have been damaged or rendered non-serviceable as a consequence of the failure shall be replaced. A new 12 month warranty against defective or deficient design, workmanship, and materials shall commence on the day that the item is reassembled and placed back into operation. As used herein, multiple failure shall be interpreted to mean two or more successive failures of the same kind in the same item or failures of the same kind in two or more items. Major failures may include, but are not limited to, cracked or broken housings, piping, or vessels, excessive deflections, bent or broken shafts, broken or chipped gear teeth, premature bearing failure, excessive wear or excessive leakage around seals. Failures which are directly and clearly traceable to operator abuse, such as operations in conflict with published operating procedures or improper maintenance, such as substitution of unauthorized replacement parts, use of incorrect lubricants or chemicals, flagrant over-or under-lubrication and using maintenance procedures not conforming with published maintenance instructions, shall be exempted from the scope of the one year warranty. Should multiple failures occur in a given item, all products of the same size and type shall be disassembled, inspected, modified or replaced as necessary and re-warranted for one year.

E. The Contractor shall, at Contractor's expense, furnish all labor, materials tools and equipment required and shall make such repairs and removals and shall perform such work or reconstruction as may be necessary by any structural of functional defect or failure resulting from neglect, faulty workmanship or faulty materials, in any part of the Work

performed by the Contractor. Such repair shall also include refilling of trenches, excavations or embankments which show settlement or erosion after backfilling or placement.

F. Except as noted on the Drawings or as specified, all structures such as embankments and fences shall be returned to their original condition prior to the completion of the Contract. Any and all damage to any facility not designated for removal, resulting from the Contractor's operations, shall be promptly repaired by the Contractor at no cost to the Owner.

G. The Contractor shall be responsible for all road and entrance reconstruction and repairs and maintenance of the same for a period of one year from the date of final acceptance. In the event of the repairs and maintenance are not made immediately and it becomes necessary for the owner of the road to make such repairs, the Contractor shall reimburse the owner of the road for the cost of such repairs.

H. In the event the Contractor fails to proceed to remedy the defects upon notification within 15 days of the date of such notice, the Owner reserves the right to cause the required materials to be procured and the work to be done, as described in the Drawings and Specifications, and to hold the Contractor and the sureties on Contractor's bond liable for the cost and expense thereof.

I. Notice to contractor for repairs and reconstruction will be made in the form of a registered letter addressed to the Contractor at Contractor's home office.

J. Neither the foregoing paragraphs nor any provision in the Contract Documents, nor any special guarantee time limit implies any limitation of the Contractor's liability within the law of the place of construction.

END OF SECTION

SECTION NO. 3000

SPARE PARTS AND SPECIAL TOOLS

PART 1 – GENERAL

1.01 DESCRIPTION

A. The Contractor shall furnish complete spare parts and special tools for each type of equipment, including valves and hydrants, supplied under this Contract. Part and special tools shall be packaged securely and labeled as to content and application.

B. Spare parts and special tools are defined as all parts and appurtenances identified in the equipment manufacturer's current published parts list and operation and maintenance literature as spare parts and special tools recommended for that item of equipment. Parts and appurtenances identified as "optional" or otherwise identified by words or symbols of similar meaning shall be considered spare parts and special tools and shall be furnished.

C. One complete set of spare parts shall be furnished for each group of two or less items of identical equipment.

D. Shop drawings submitted for all items of equipment shall include complete current published parts information, which shall clearly show the manufacturer and sub manufacturer's recommended spare parts.

E. Any spare parts and special tools in addition to the above requirements shall be furnished when specifically specified.

F. The cost for spare parts and special tools shall be included in the bid prices for the equipment and no extra payment will be made for spare parts.

END OF SECTION NO.

SECTION NO. 03100

CONCRETE FORMWORK

PART 1 - GENERAL

1.05 SCOPE

Furnish and install the concrete formwork as required by the concrete outlines shown and indicated on the Drawings and specified in this Section, complete.

1.06 FORM DESIGN

Provide the design of all forms for this work. Formwork shall comply with ANSI A10.9 and OSHA Construction Standards, Part 1926, Subpart Q, Concrete, Concrete Forms, and Shoring. In addition, the form designs shall meet the requirements of ACI 347.

1.07 SUBMITTALS

A. Do not provide submittals for the structural design of forms.

B. Form Tie Assemblies: Manufacturer's product data sheets fully describing the form tie assemblies.

C. Form Releasing Agent: Manufacturer's product data sheets fully describing the form coating.

D. Plywood Panels: Certification that the plywood panels for use on this work meet the specified standard.

1.08 STORAGE AND PROTECTION

All form materials and accessories shall be stored above ground on framework or blocking, shall be protected from precipitation and shall have adequate air circulation and ventilation.

PART 2- PRODUCTS

2.01 FORM MATERIAL

A. Smooth Form Finish: Forms for this finish shall be applied to surfaces specified in Section 03300 of these Specifications. Some of these surfaces will receive a brushed surface coating as specified in Section 03300 of these Specifications. Form facing material shall produce a smooth, dense, uniform texture on the concrete. Form facing shall be one of the following:

1. Plywood, meeting the requirements of U.S. Department of Commerce Product Standard (PS). PS 1 - Construction and Industrial Plywood, B-B Concrete Form Panels. The arrangement of the facing material shall be orderly with the number of seams kept to a practical minimum.

2. Patented forms may be used, subject to acceptance by the Engineer, provided they produce a smooth, even surface. This acceptance is for the finish these forms will leave on the contact surfaces and will not relieve the Contractor of the responsibility for the design and structural soundness of the forms. Patented forms shall be lined with the specified plywood. Plywood panels and form liners shall not be used more than three times unless further use is acceptable to the Engineer.

B. Rough Form Finish: Forms for this finish shall be applied to the surfaces specified in Section 03300 of these Specifications. Forms for this finish may be the same as specified for the Smooth Form Finish or may be constructed of used plywood panels, unlined steel forms or straight dressed lumber.

C. Formwork for "pan joist" construction shall be either of steel or reinforced fiberglass. Pans shall be of sufficient stiffness and strength to hold their shape and support construction loads during concrete casting. Do not use pans that are bent out of shape or rusty.

2.02 ACCESSORIES

A. Form ties for use in all liquid containment structure walls shall be one of the following:

1. Form clamp assemblies with smooth tie rods with a waterstop at their centers; or "she bolt" tie assemblies with a waterstop at their centers.

2. Both of the assemblies shall permit tightening of the forms and be of such type that leaves no tie metal, or any other tie material, within 1-1/2-inch of the surface after use. The assemblies shall provide cone-shaped depressions at the surface of the concrete at least 1-inch in diameter to allow filling and patching with the specified grout.

B. Form ties for use in all other walls shall be one of the assemblies specified in Article 2.02, paragraph A., except that waterstops are not required.

C. Form releasing agents shall be a non-staining form coating compound.

PART 3 – EXECUTION

3.01 FORM CONSTRUCTION

A. Formwork shall be in accordance with ACI 347 and as follows:

1. Forms shall conform to shape, lines and dimensions of members indicated and shall be sufficiently rigid and tight to prevent leakage of mortar. Forms shall be properly braced or tied together so as to maintain position and shape. Construct forms so that they can be removed readily without hammering or prying against the concrete. Forms for exposed concrete shall be carefully made and accurately placed to obtain correct shape and lines. Cambers shall be as noted on the Drawings.

2. Joints shall be butted tight. Arrangements of panels shall be orderly and symmetrical, and use of small pieces shall be avoided. Forms shall be chamfered 1-inch for external corners of concrete, including top of walls, which will be exposed to view in the finished work.

3. Provide adequate formwork in its entirety. Forms shall safely support loads they will sustain and shall maintain their dimensional and surface correctness to produce members required by the Drawings. Form ties shall be spaced close enough to avoid bulges and variations in the required cross-sectional dimensions shown on the Drawings for the members being cast.

4. Box out for chases, recesses or other openings required in the completed work.

5. Install all the items (sleeves, inserts, hangers, anchors, etc.) to be supported by the formwork as required by the work.

6. Install pipe sleeves, wall pipes and wall sleeves, as shown or specified, for all piping penetrating walls and slabs. The use of block-outs in walls is prohibited. Pipe sleeves shall be used in slabs for plumbing pipes and wiring conduits.

7. Provide a sufficient number of cleanout doors at the base of walls and columns to facilitate cleaning and the application of grout to the column bases.

8. The use of reinforcing steel, partially embedded in concrete, as toe pins or form spacers is prohibited.

3.02 TOLERANCES FOR FORMED SURFACES

A. Variation from Plumb

1. In the Lines and Surfaces of Columns, Piers, Walls:

   a. In any 10 Feet of Height: 1/4-inch (walls 1/2-inch).
   b. Maximum for the Entire Height: 1-inch.

2. For Exposed Corner Columns, Construction and Expansion Joint Grooves and Other Conspicuous Lines:

   a. In any 20 Foot Height: 1/4-inch.
   b. Maximum for the Entire Height: 1/2-inch.

B. Variation from the Level or from the Grades Shown on the Drawings:

1. In Slab Soffits, Beam Soffits and Tops of Slabs, Measured Before Removal of Supporting Shores:

   a. In any 10 Foot Length: 1/4-inch.
   b. In any Bay or in any 20 Foot Length: 3/8-inch.
   c. Maximum for the Entire Length: 3/4-inch.

2. In Exposed Lintels, Sills, Parapets, Horizontal Grooves and Other Conspicuous Lines:

   a. In any Bay or in any 20 Foot Length: 1/4-inch.
   b. Maximum for the Entire Length: 1/2-inch.

C. Variation of the Linear Building Lines from Established Position in Plan and Related Position of Columns, Walls and Partitions:

1. In any Bay: 1/2-inch.

2. In any 20 Foot Length: 1/2-inch.

3. Maximum for the Entire Length: 1-inch.

D. Variation in the Sizes and Location of Sleeves for Plumbing Pipes and Electrical Conduits, Floor Openings and Wall Openings: +1/4-inch.

E. Variation in Cross-Sectional Dimensions of Columns and Beams and in the Thickness of Slabs and Walls: -1/4-inch, +1/2-inch.

F. Variation in Sizes of Pipe Sleeves, Wall Pipes and Wall Sleeves: None.

G. Variation in Location of Pipe Sleeves, Wall Pipes and Wall Sleeves: +1/8-inch.

H. Footings

1. Variations in Dimensions in Plan: -1/2-inch, +2-inches.

2. Misplacement or Eccentricity: Two percent of the footing width in the direction of misplacement but not more than: 2-inches.

3. Thickness: Decrease in specified thickness - none; increase in specified thickness 25 percent unless otherwise approved by the Engineer.

4. Tolerances above apply to concrete dimensions only, not to positioning of vertical reinforcing steel, dowels or embedded items.

I. Variation in Steps

1. In a Flight of Stairs:

a. Rise: ±1/4-inch.
b. Tread: ±1/4-inch.

2. In Consecutive Steps:

a. Rise: +0-inch, -1/8-inch.
b. Tread: ±1/8-inch.

3.03 APPLICATION OF FORM COATING

Before the placing of reinforcing, faces of all forms to be in contact with the concrete shall receive a thorough coating of the liquid form-releasing agent specified, applied in compliance with the manufacturer's instructions.

3.04 INSPECTION

Inspect all the work in accordance with Section 03300 of these Specifications.

3.05 REMOVAL OF FORMS

A. Forms shall be removed in a manner that will insure the complete integrity of the structure. The forms and shoring shall remain in place for the following minimum periods of time after the casting of the concrete is completed:

	Form Removal, Days	**Shoring, Days**
Beams and Slabs (Soffits)	7	14
Walls	1	0
Columns	1	0

B. Formwork for beam and slab soffits shall be designed so that they can be removed without removal of sufficient original shores to adequately support the work until such time that the concrete strength reaches its specified 28 day strength.

C. Removal of forms shall be coordinated with the selected specified method of curing concrete.

D. Wood forms shall be completely removed from all the work to avoid termite infestation.

END OF SECTION

SECTION NO. 03200

CONCRETE REINFORCEMENT

PART 1 - GENERAL

1.09 SCOPE

Furnish and install the concrete reinforcement as shown and indicated on the Drawings and specified in this Section, complete in place.

1.10 SUBMITTALS

A. Shop Drawings

1. All shop drawings shall be of the same size. Reproductions of the Drawings for use as shop drawings is not permitted. Shop drawings shall include placing drawings, bending details, and bar lists with bar marks. All details and notes appearing on the Drawings, giving information for the placing of reinforcing steel, shall be shown on the shop drawings. Shop drawings will not be reviewed without such information.

2. Wall reinforcing shall be shown in elevation.

3. Show location and size of all penetrations greater than 6-inches in diameter or across the opening with the corresponding added reinforcing around the penetrations.

4. Submittals shall be complete for each structure. Partial submittals are not permitted and will be returned unmarked. Each submittal shall clearly indicate the structure and Drawing numbers that the work is for. The identifying numbers of the shop drawings for each structure shall be in numerical order.

5. Location and arrangement of accessories shall be clearly indicated.

6. All shop drawings shall be checked by the fabricator and Contractor before being submitted to the Engineer.

B. Mill tests of reinforcing steel shall be submitted prior to use for each 15 tons or less shipped to the site. Tests shall be conducted in conformance with ASTM A 615, and methods prescribed therein.

1. Cost of mill tests shall be borne by Contractor.

2. Three copies of each test report stating whether the material meets the requirements of the ASTM specifications shall be submitted to the Engineer.

3. Certified copies of the mill tests may be considered evidence of compliance provided such tests are regularly conducted by the reinforcement supplier by experienced, competent

personnel using adequate testing equipment. In case of doubt as to the adequacy or accuracy of the mill tests, the Engineer may require the Contractor to furnish, at no additional cost to the County, test results from an independent testing laboratory acceptable to the Engineer on mill samples or delivered steel reinforcement.

PART 2 – PRODUCTS

2.01 REINFORCING BARS

A. Bar reinforcement shall be deformed-type bars conforming to ASTM A 615. Reinforcement shall be manufactured from new billet steel of American manufacture, Grade 60.

B. Reinforcing steel shall be shop fabricated to shapes and dimensions indicated on the Drawings and in compliance with applicable provisions of ACI 315 and ACI 318.

C. Bars shall be bent cold. Bars shall be pre-fabricated to detail and delivered on the job plainly tagged and ready to set.

2.02 WELDED WIRE FABRIC

Welded wire fabric shall be in flat sheets conforming to ASTM A 185, with wire conforming to ASTM A 82.

2.03 ACCESSORIES

A. All chairs and bolsters shall have plastic-covered or galvanized steel legs at formed slabs and beams. For slabs on grade, bare metal is acceptable.

B. For slabs on grade 10-inches or less, all reinforcing shall be supported on chairs and/or bolsters as required to properly position the bars or welded wire fabric. The chairs and/or bolsters shall be supported on precast concrete pads bearing on the subgrade. The concrete pads shall be at least 6 x 6-inches and be no more than 1-1/2-inches thick. Pads shall be cast from Class "A" concrete or from mortar made up of one part cement and two parts sand, with tie wires embedded.

C. For slabs on grade greater than 10-inches, reinforcing shall be supported directly on concrete brick bearing on the subgrade or the system noted above for slabs 8-inches or less.

PART 3 - EXECUTION

3.01 STORAGE OF MATERIALS

Reinforcing steel delivered to the site, not immediately placed in forms, shall be protected from mud and excessive rust-producing conditions by storing in a well-drained area and supported off the ground. All reinforcing shall be properly tagged with their bar marks and location in the structure clearly noted.

3.02 TOLERANCES

A. Allowable tolerances for fabricating steel reinforcement shall be as follows:

Item	Maximum Tolerance, Inches	
Sheared Length of Bars	+1	-1
Depth of Truss Bars	+0.0	-1/2
Outside Dimensions of Stirrups, Ties and Spirals	+1/2	-1/2
Location of Bends	+1	-1

B. Allowable tolerances for placing steel reinforcement shall be as follows:

Item	Maximum Tolerance, Inches	
Concrete Cover from Outside of Bar to Finished Surface	+1/4	-0.0
Lateral Spacing of Bars in Plane of Reinforcement in Beams and Joists	+1/4	-0.0
Lateral Spacing of Bars in Plane of Reinforcement in Plane of Reinforcement in Slabs and Walls	+1	-1
Spacing of Stirrups, Ties and Spirals Along Longitudinal Axis of Member	+1/2	-1/4
Height of Bottom Bars in Slabs, Beams and Joists	+1/4	-1/4
Height of Top Bars in Slabs, Beams and Joists		
Depth 8" and Less	+1/4	-1/4
Depth 9" - 24"	+1/2	-1/2
Depths 25" & Greater	+1	-1

3.03 FIELD FABRICATION

Field fabrication of reinforcing steel is not permitted.

3.04 PLACEMENT AND ANCHORAGE

A. Space metal chairs, bolsters, spacers and hangers in accordance with ACI 315.

B. Reinforcement, at the time concrete is placed, shall be free from rust scale or other coatings that will destroy or reduce bond. Bars with kinks or bends not shown on the plans shall not be used.

C. Reinforcement shall be accurately placed in accordance with the Drawings and shall be adequately secured in position with not less than 16 gauge annealed wire or suitable clips at intersections. Reinforcement shall be held securely at the required distance from the forms. Nails shall not be driven into outside forms to support reinforcement.

D. Install welded wire fabric reinforcement for concrete slabs on ground and as otherwise indicated. Lap all joints 6-inches and wire securely. Extend mesh to within 2-inches of sides and ends of slabs. Sheets that do not lay flat when in their intended position will be rejected. Tags designating the wire size and spacing shall be left on each sheet until ready for use. Tuck ends of welded mesh well down into edge of beams or walls. Do not leave unreinforced border strips. Welded wire fabric shall not contain loose rust. All welded wire fabric shall be supported and tied in its proper location.

E. Conduits: Where conduits are permitted in slabs, low conduit shall be wired to the upper side of bottom reinforcing and top conduit shall be wired to lower side of top steel. Where parallel conduits occur, they shall be separated by at least 2-inches clear.

3.05 CONCRETE COVER

A. Unless otherwise shown on the Drawings, the following concrete cover shall be provided for reinforcement:

1. Bottom and Sides of Footing: 3 inches.

2. Walls: 2 inches.

3. Slabs (Framed)

   a. Bottom: 3/4 inch.
   b. Top: 1 inch.

4. Beams (Stirrups)

   a. Bottom and Sides: 1-1/2 inch.
   b. Top: 2 inches.

5. Columns (Ties, Spirals): 2 inches.

6. Slabs on Grades - Liquid Containment Structures

   a. Bottom and Sides: 3 inches.
   b. Top: See Drawings.

7. Slabs on Grade - Other Structures: See Drawings.

3.06 SPLICING

A. Splicing of reinforcement shall be as shown and indicated on the Drawings. Splices not shown on the Drawings shall be Class "B" splice, in accordance with ACI 318. Any changes to the location and type of splices desired by the Contractor must be specifically requested and must meet with the acceptance of the Engineer before they can be used.

B. Splices shall not be made at point of maximum stress and shall provide sufficient lap to transfer stress between bars by bond.

C. Mechanical splices may be used instead of lap splices provided that their location and type meets with the acceptance of the Engineer.

3.07 INSPECTION

Inspect all the work in accordance with Section 03300 of these Specifications.

END OF SECTION

STANDARD DETAIL DRAWINGS

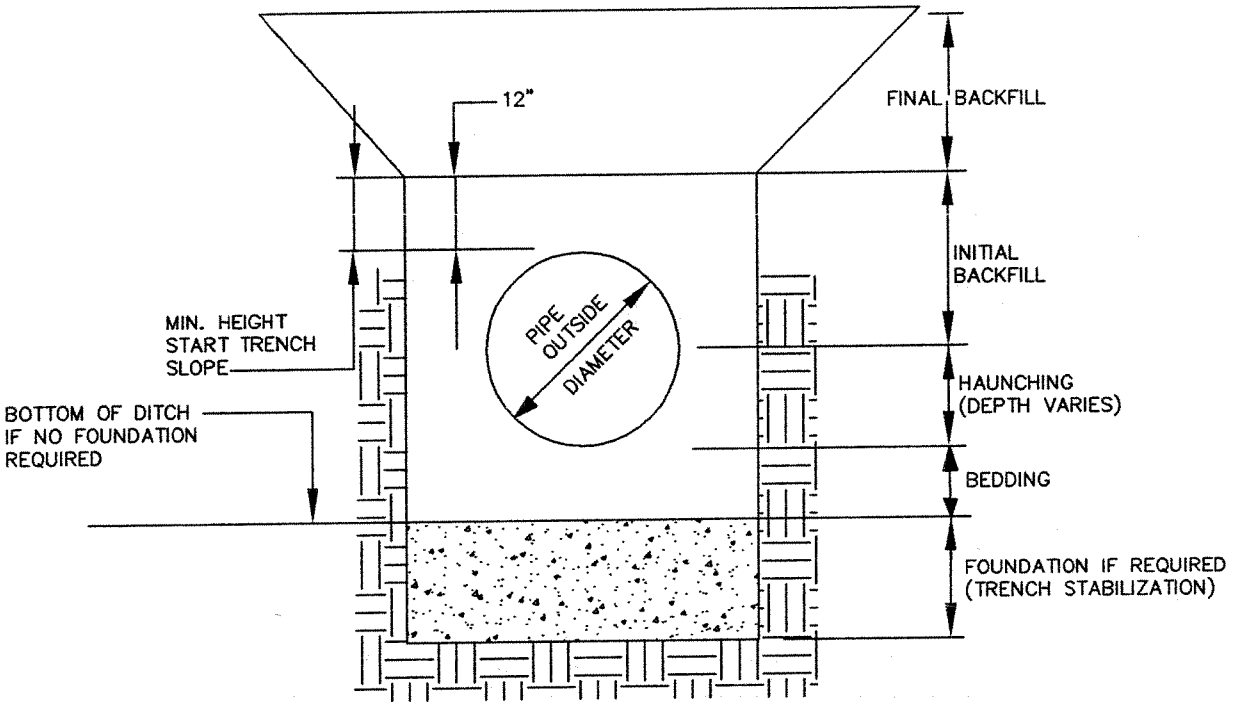

NOTE: SEE SPECIFICATIONS SECTION 02225 AND DETAIL NO. G-2 FOR DIMENSIONS AND MATERIALS

REVISIONS	DATE	FULTON COUNTY ENGINEER'S OFFICE	
		FULTON COUNTY STANDARD G-1 TRENCH TERMINOLOGY	
		SCALE	
		DSN / DWN SMR / CK'D REV — APPR'D DATE 3/23/04 — COUNTY ENGR.	FILE NO. G-1

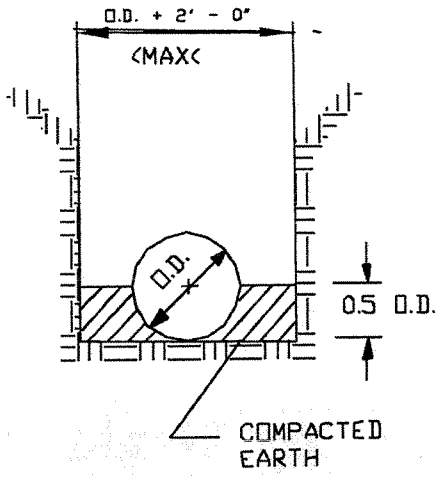

TYPE 2

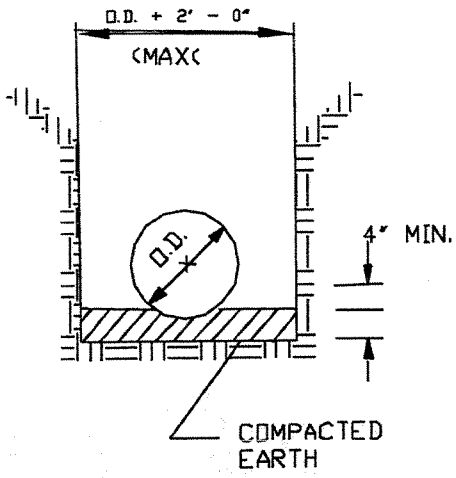

TYPE 3

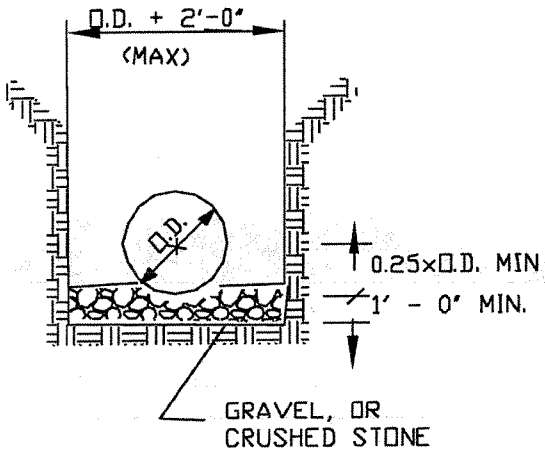

TYPE 4

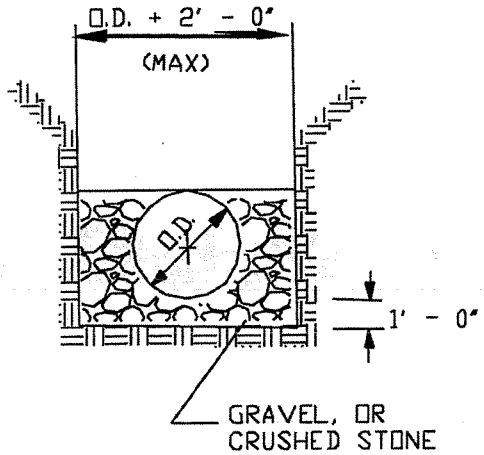

TYPE 5

FULTON COUNTY ENGINEER'S OFFICE		
FULTON COUNTY STANDARD G-2 WATER MAIN BEDDING AND HAUNCHING SCALE		
DSN DWN SMR CK'D REV	APPR'D DATE 3/23/94 COUNTY ENGR.	FILE NO. G-2

REVISIONS BY DATE

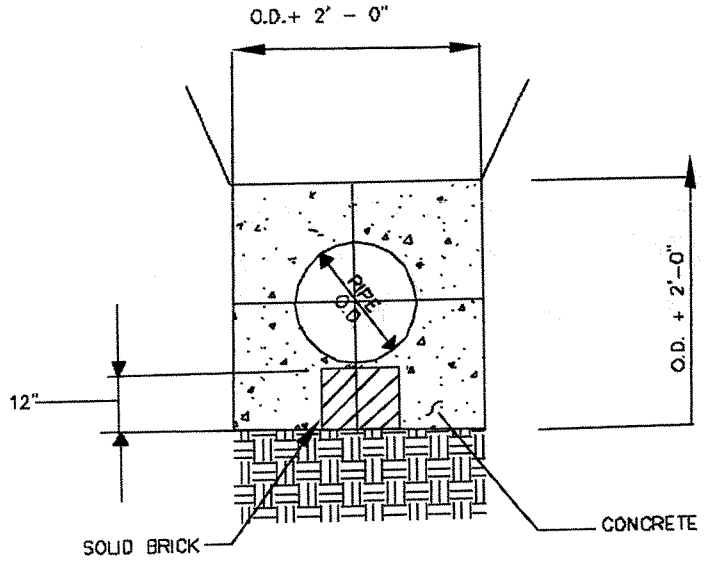

FULTON COUNTY ENGINEER'S OFFICE			
FULTON COUNTY STANDARD G-4 CONCRETE ENCASEMENT			
SCALE			
DSN DWN SHR. CK'D REV	APPR'D DATE 3/23/84 COUNTY ENGR.	FILE NO. G-3	

REVISIONS BY DATE

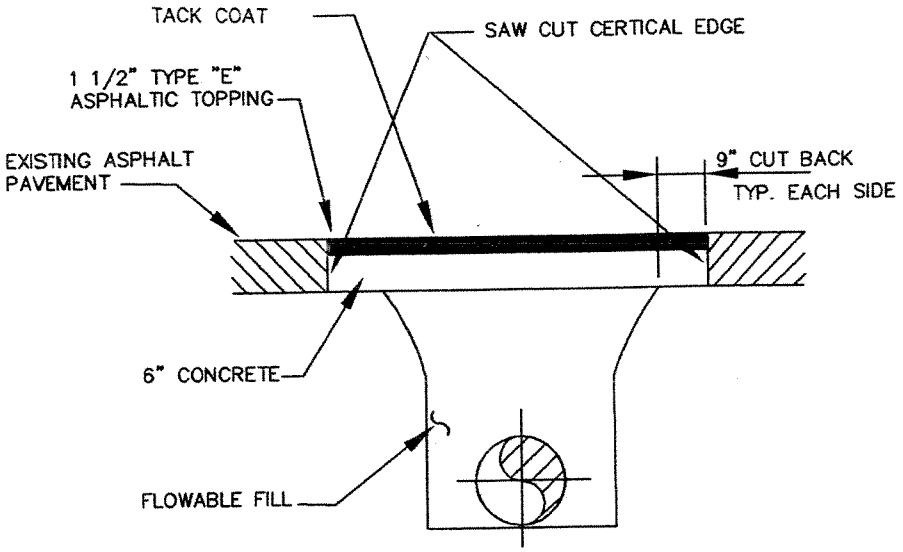

ASPHALT PAVEMENT

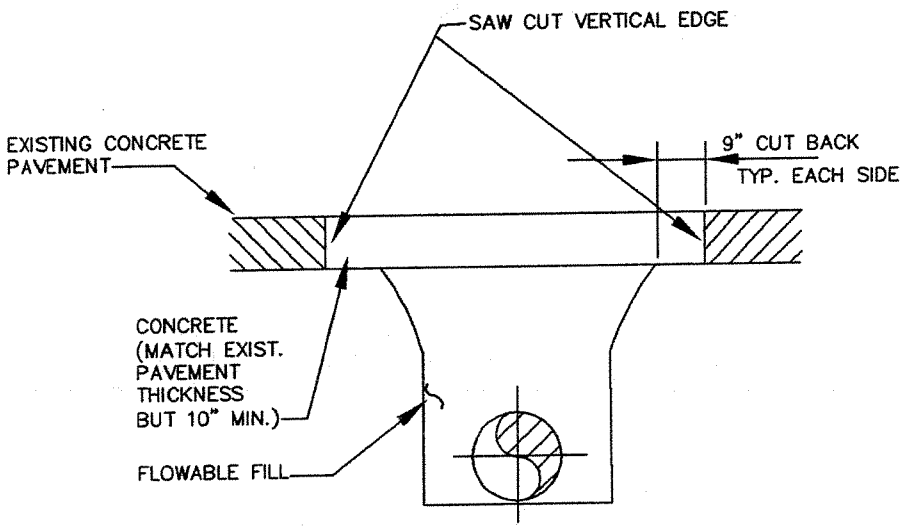

CONCRETE PAVEMENT

NOTE:
TYPE I PAVEMENT REPLACEMENT SHALL BE USED FOR:

1. ALL POINT REPAIRS.
2. ALL TRENCHES, (LONGITUDINAL OR CROSSING INSTALLATIONS) LESS THAN 12-INCHES WIDE AT EXISTING GRADE.
3. ALL TRENCHES FOR ROADWAY CROSSINGS WHERE THE TRENCH WIDTH AT THE TOP OF THE PIPE IS LESS THAN OR EQUAL TO THREE FEET, AND THE TRENCH DEPTH IS LESS THAN OR EQUAL TO EIGHT FEET.
4. AT CONTRACTOR'S OPTION, IN LIEU OF TYPE II OR TYPE III PAVEMENT REPLACEMENT.

REVISIONS	FULTON COUNTY ENGINEER'S OFFICE		
	FULTON COUNTY STANDARD G-5 TYPE I PAVEMENT REPLACEMENT		
	SCALE		
BY	DSN DWN SHR CK'D REV	APPR'D DATE 3/22/04 COUNTY ENGR.	FILE NO. G-4

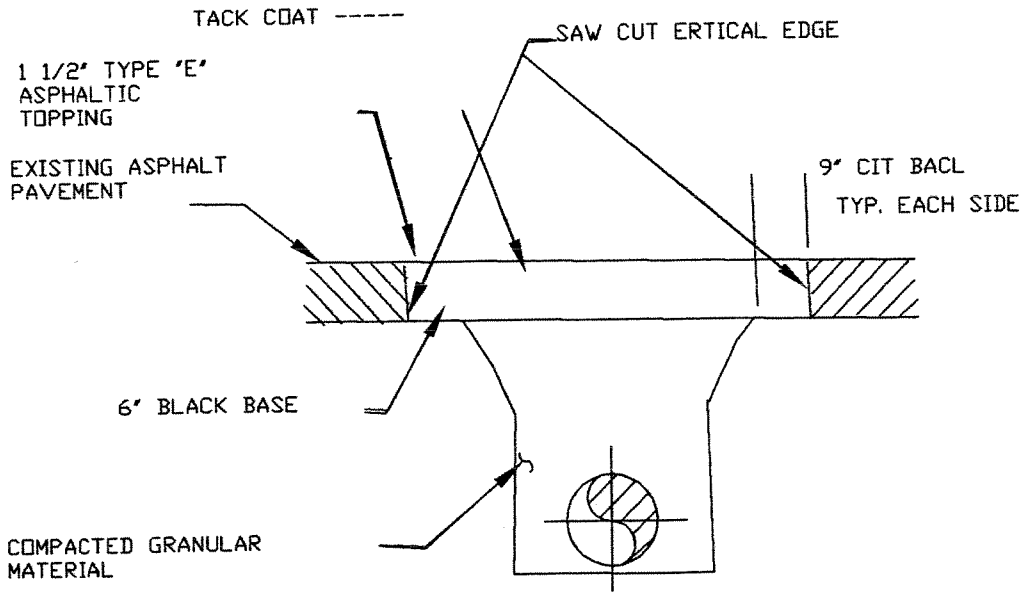

ASPHALT PAVEMENT

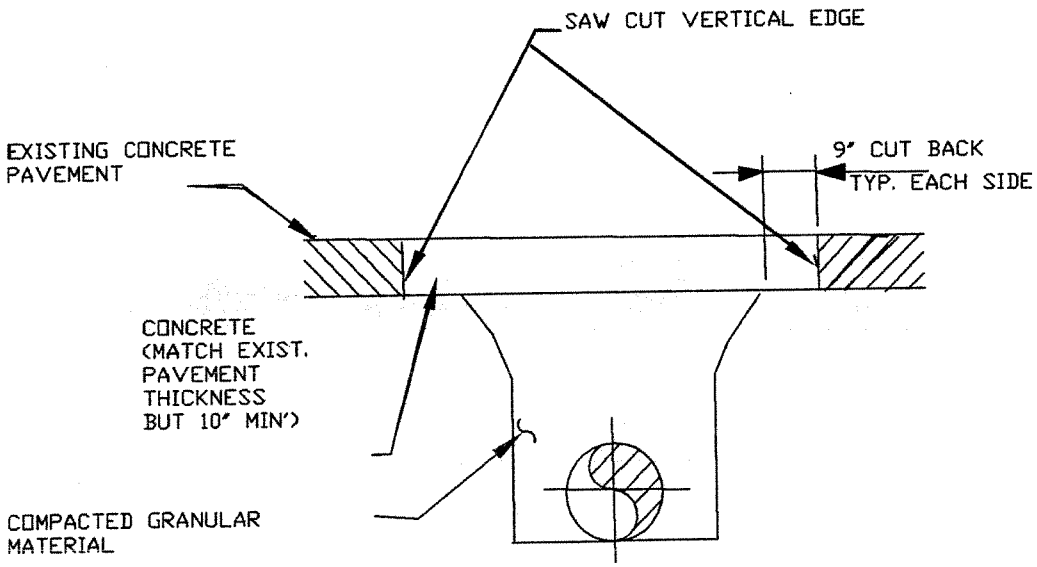

CONCRETE PAVEMENT

NOTE:
TYPE II PAVEMENT REPLACEMENT SHALL BE USED FOR:

1. ALL TRENCHES FOR ROADWAY CROSSINGS WHICH DO NOT MEET THE CRITERIA FOR TYPE I PAVEMENT REPLACEMENT.
2. ALL TRENCH LONGITUDINAL INSTALLATIONS WHICH DO NOT MEET THE CRITERIA FOR THE III PAVEMENT REPLACEMENT.
3. AT CONTRACTOR'S OPTION, IN LIEU OF TYPE III PAVEMENT REPLACEMENT.

REVISIONS	FULTON COUNTY ENGINEER'S OFFICE		
	FULTON COUNTY STANDARD G-6 TYPE II PAVEMENT REPLACEMENT		
	SCALE		
BY	DSN ___ DWN SMR CK'D REV	APPR'D DATE 3/22/04 COUNTY ENGR.	FILE NO. G-5

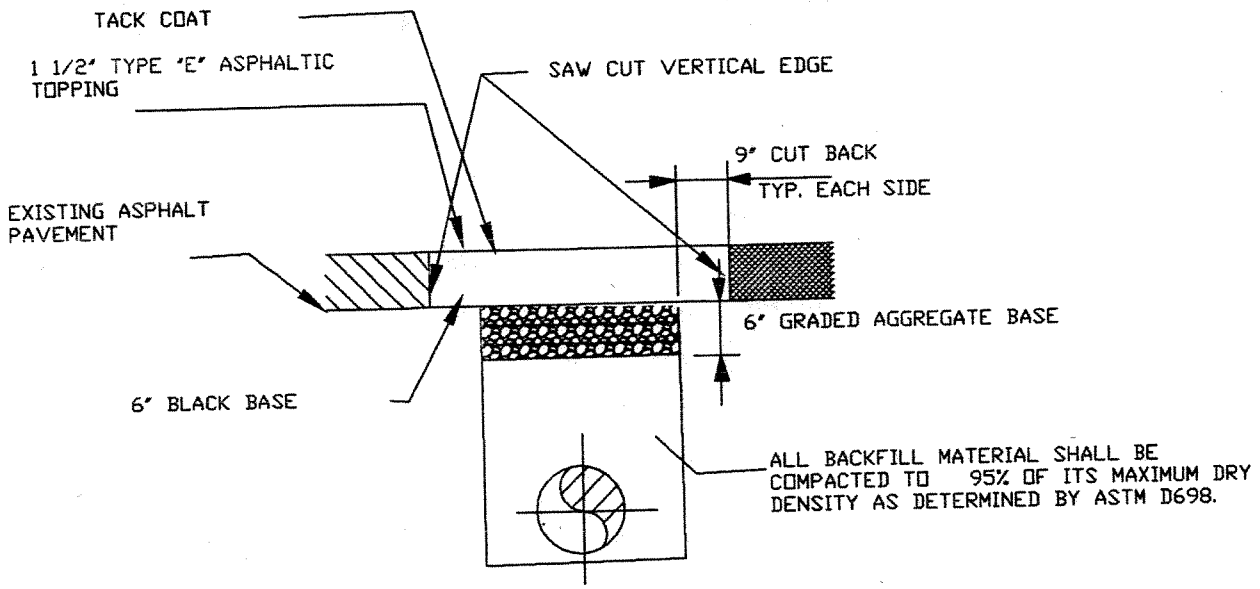

ASPHALT PAVEMENT

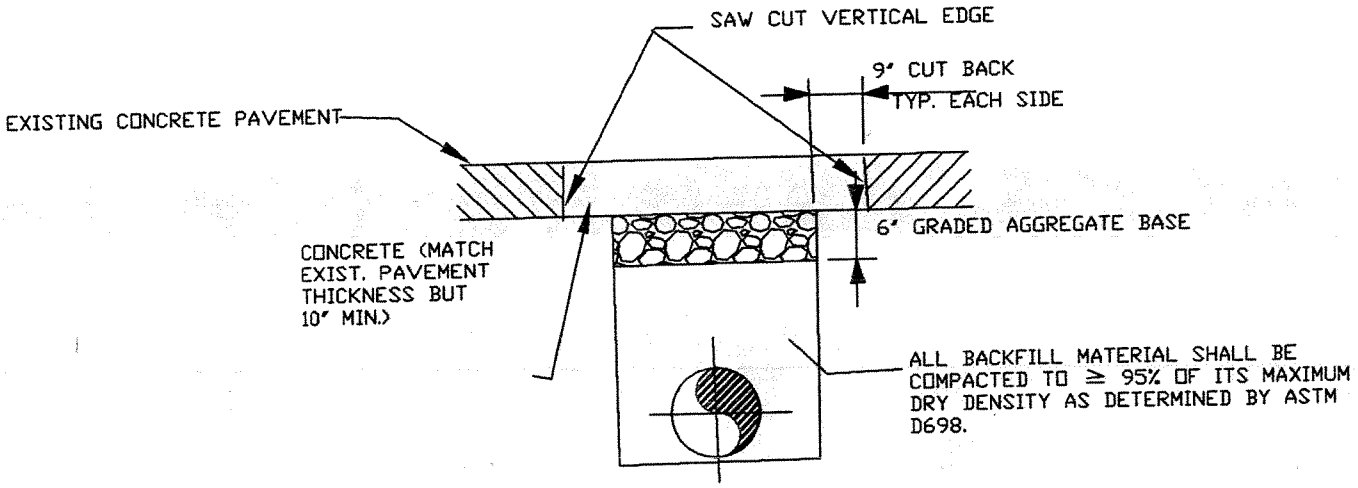

CONCRETE PAVEMENT

NOTE:
TYPE iii PAVEMENT REPLACEMENT SHALL BE USED ONLY FOR LONGITUDINAL INSTALLATION AND WHERE THE TRENCH WIDTH AT THE TOP OF PIPE IS GREATER THAN FOUR FEET.

REVISIONS	FULTON COUNTY ENGINEER'S OFFICE	
	FULTON COUNTY STANDARD G-7 TYPE III PAVEMENT REPLACEMENT	
BY	SCALE	
DSN ___ DWN SMR CK'D REV	APPR'D DATE 3/22/04 COUNTY ENGR.	FILE NO. G-6

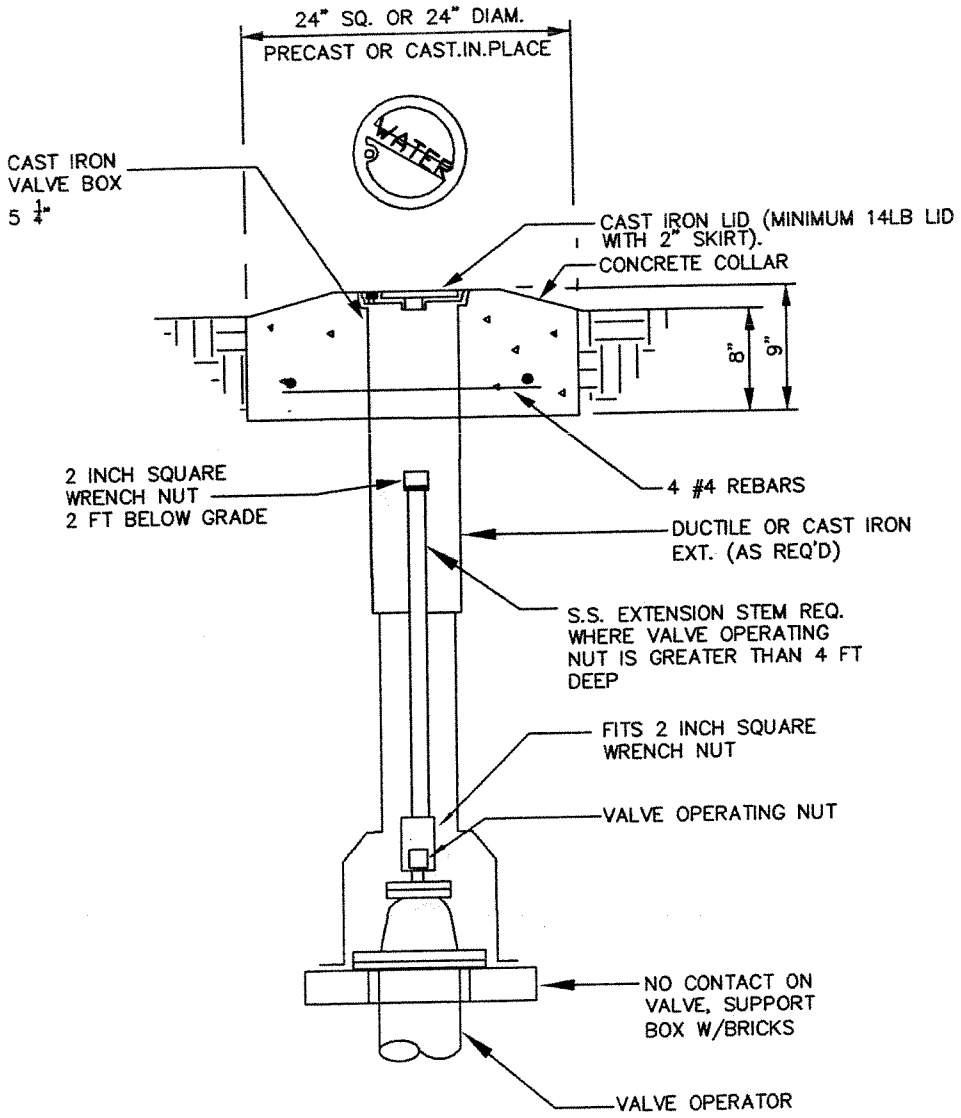

REVISIONS / DATE	FULTON COUNTY ENGINEER'S OFFICE		
	FULTON COUNTY STANDARD W-1 UNDERGROUND VALVE BOX		
	SCALE		
DSN / DWN / CK'D / SEK / REV	APPR'D DATE 3/15/04 COUNTY ENGR.		FILE NO. W-1

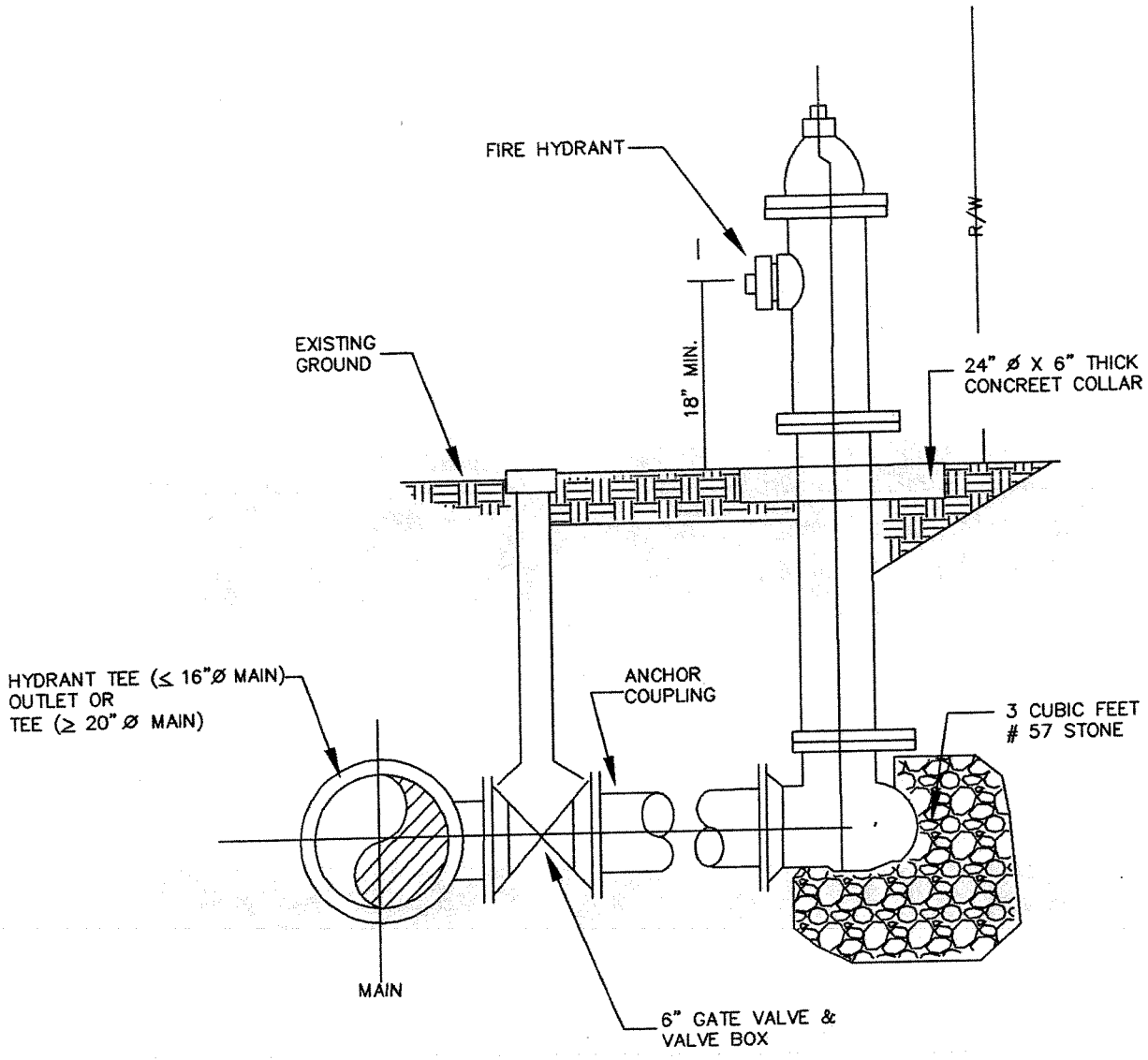

REVISIONS / DATE / BY	FULTON COUNTY ENGINEER'S OFFICE		
	FULTON COUNTY STANDARD W-2 FIRE HYDRANT		
	SCALE		
DSN / DWN SEK / CK'D REW	APPR'D DATE 3/15/04 COUNTY ENGR.		FILE NO. W-2

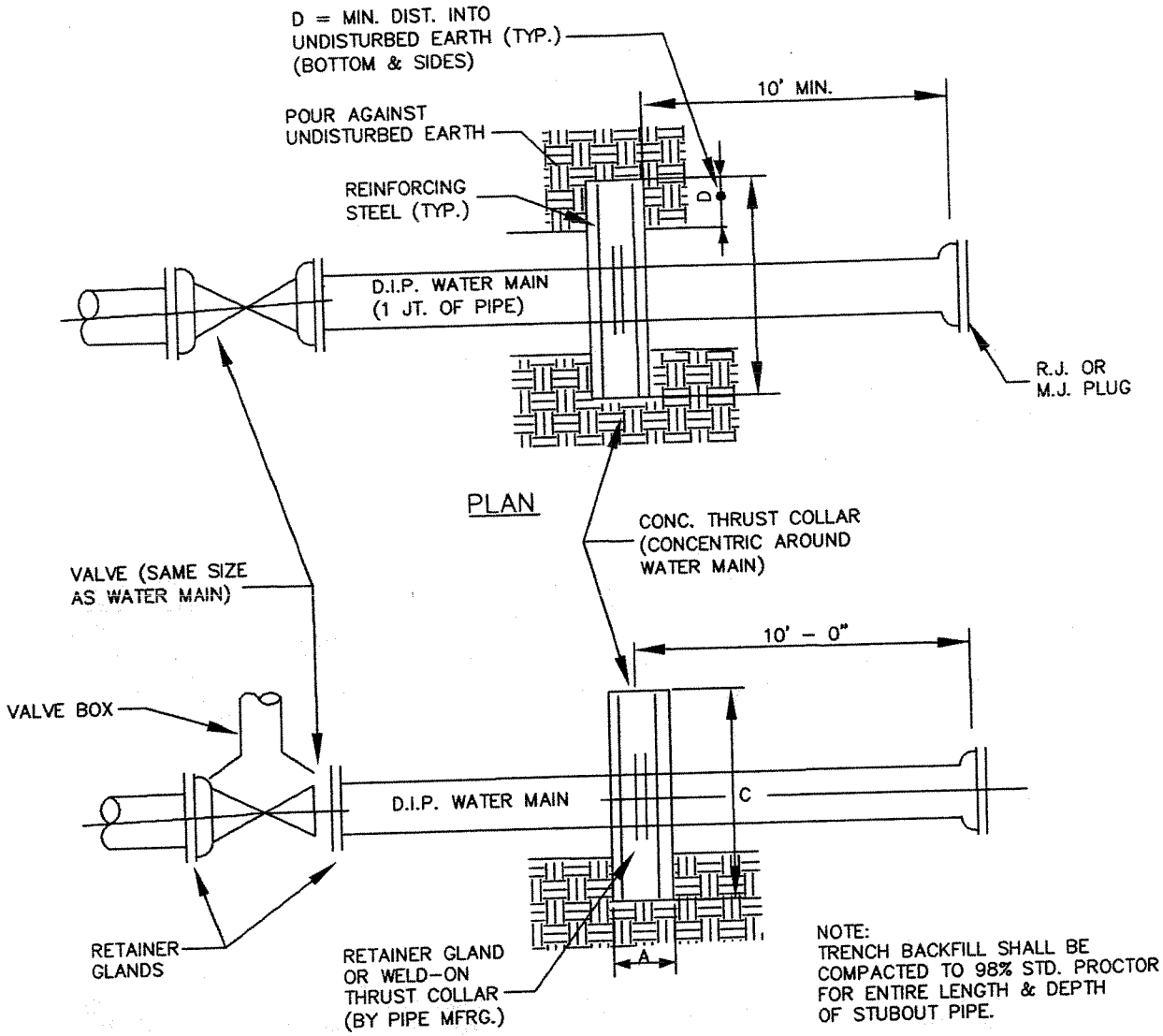

SECTION

MAIN DIA	CONCRETE COLLAR DIM.				REINFORCING STEEL
	A	B	C	D	
24"	1'–10"	9'–3"	9'–3"	2'–9"	#9 @ 12" O.C. E.W.E.F.
16"	1'–3"	6'–6"	6'–6"	1'–10"	#8 @ 12" O.C. E.W.E.F.
10" OR 12"	1'–2"	5'–3"	5'–3"	1'–4"	#7 @ 12" O.C. E.W.E.F.
6" OR 8"	1'–0"	4'–0"	4'–0"	1'–0"	#6 @ 12" O.C. E.W.E.F.

TEST PRESSURE: 250 P.S.I.
SOIL BEARING PRESSURE: 2500 P.S.F.

NOTE:
TERMINATION DETAIL FOR LARGER DIAMETER PIPE SHALL BE DETERMINED FOR EACH PROJECT.

REVISIONS / DATE	FULTON COUNTY ENGINEER'S OFFICE	
	FULTON COUNTY STANDARD W-3 WATER MAIN TERMINATION	
	SCALE	
DSN / DWN SEK / CK'D REV	APPR'D DATE 3/15/04 / COUNTY ENGR.	FILE NO. W-3

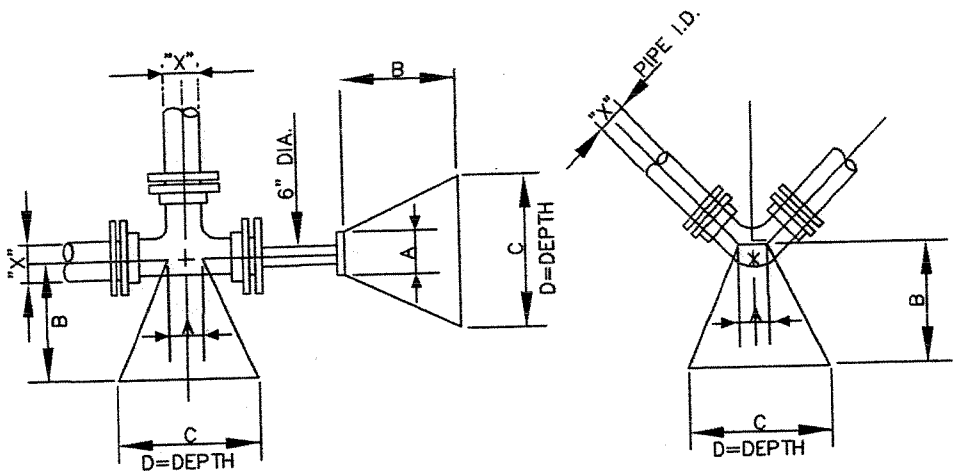

250 PSI TEST PRESSURE
2,500 PSF SOIL BEARING

BLOCKING DIMENSIONS						
		X*	A	B	C	D
DEAD ENDS & TEES		24"	2'-0"	4'-6"	14.0'	7.0'
		20"	1'-8"	3'-9"	11.7'	5.9'
		16"	1'-3"	3'-3"	9.5'	4.7'
		12"	1'-0"	2'-6"	7.1'	3.6'
		10"	1'-0"	2'-0"	6.0'	3.0'
		8"	0'-10"	1'-9"	4.9'	2.5'
		6"	0'-8"	1'-3"	3.7'	1.8'
BENDS	90 DEGREES	24"	2'-0"	5'-9"	16.7'	8.3'
		20"	1'-8"	4'-9"	13.9'	7.0'
		16"	1'-3"	4'-0"	15.9'	5.6'
		12"	1'-0"	3'-0"	8.5'	4.3'
		10"	1'-0"	2'-6"	7.1'	3.6'
		8"	0'-10"	2'-0"	5.9'	2.9'
		6"	0'-8"	1'-6"	4.4'	2.2'
	45 DEGREES	24"	2'-0"	4'-0"	12.2'	6.1'
		20"	1'-8"	3'-3"	10.2'	5.1'
		16"	1'-3"	2'-9"	8.2'	4.1'
		12"	1'-0"	2'-0"	6.2'	3.1'
		10"	1'-0"	1'-9"	5.3'	2.6'
		8"	0'-10"	1'-6"	4.3'	2.2'
		6"	0'-8"	1'-3"	3.2'	1.6'

BLOCKING DIMENSIONS					
	X*	A	B	C	D
BENDS 22 1/2 DEG.	24"	2'-0"	2'-6"	8.8'	4.4'
	20"	1'-8"	2'-0"	7.4'	3.7'
	16"	1'-3"	1'-9"	5.9'	2.9'
	12"	1'-0"	1'-3"	4.5'	2.3'
	10"	1'-0"	1'-3"	3.8'	1.9'
	8"	0'-10"	1'-0"	3.1'	1.6'
	6"	1'-8"	0'-9"	2.3'	1.2'
BENDS 11 1/4 DEG.	24"	2'-0"	1'-6"	6.2'	3.1'
	20"	1'-8"	1'-3"	5.2'	2.6'
	16"	1'-3"	1'-0"	4.2'	2.1'
	12"	1'-0"	0'-9"	3.1'	1.6'
	10"	1'-0"	0'-9"	2.7'	1.4'
	8"	0'-10"	0'-6"	2.1'	1.1'
	6"	0'-8"	0'-6"	1.4'	1.0'

REVISIONS	BY	DATE	FULTON COUNTY ENGINEER'S OFFICE
			FULTON COUNTY STANDARD W-4 THRUST BLOCKING
			SCALE
DSN / DWN SEK / CK'D REV	APPR'D DATE 3/15/04	COUNTY ENGR.	FILE NO. W-4

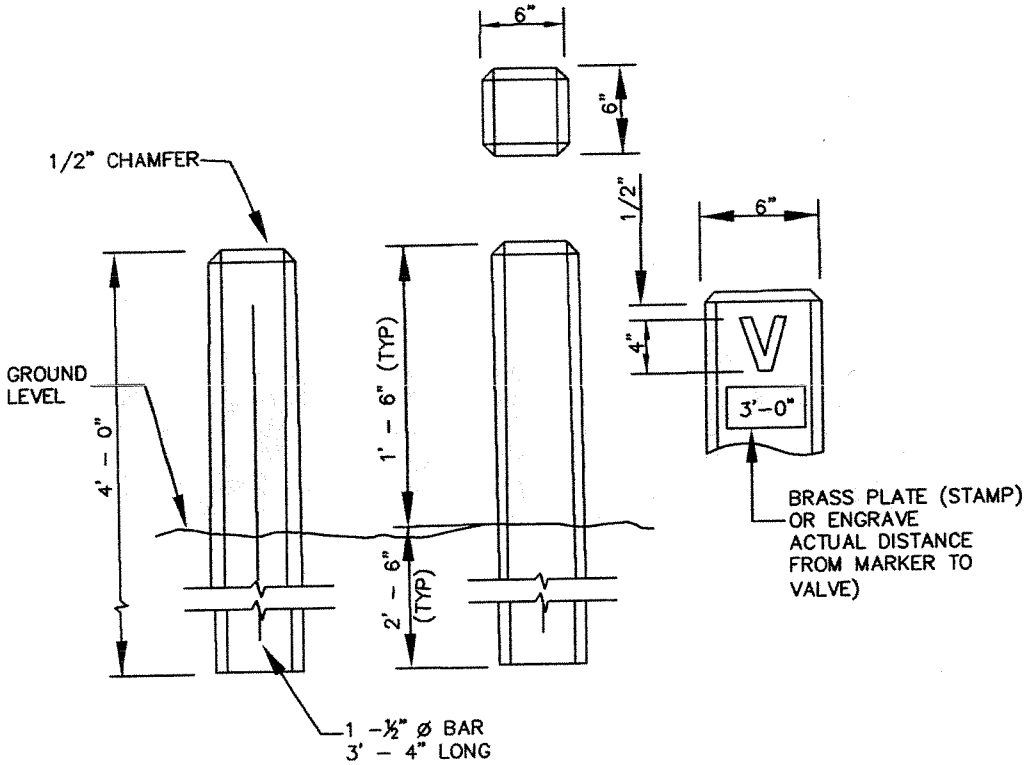

FULTON COUNTY ENGINEER'S OFFICE		
FULTON COUNTY STANDARD W-5 WATER VALVE MARKER		
SCALE		
DSN DWN SEK CK'D REV	APPR'D DATE 3/16/04 COUNTY ENGR.	FILE NO. W-5

REVISIONS | DATE

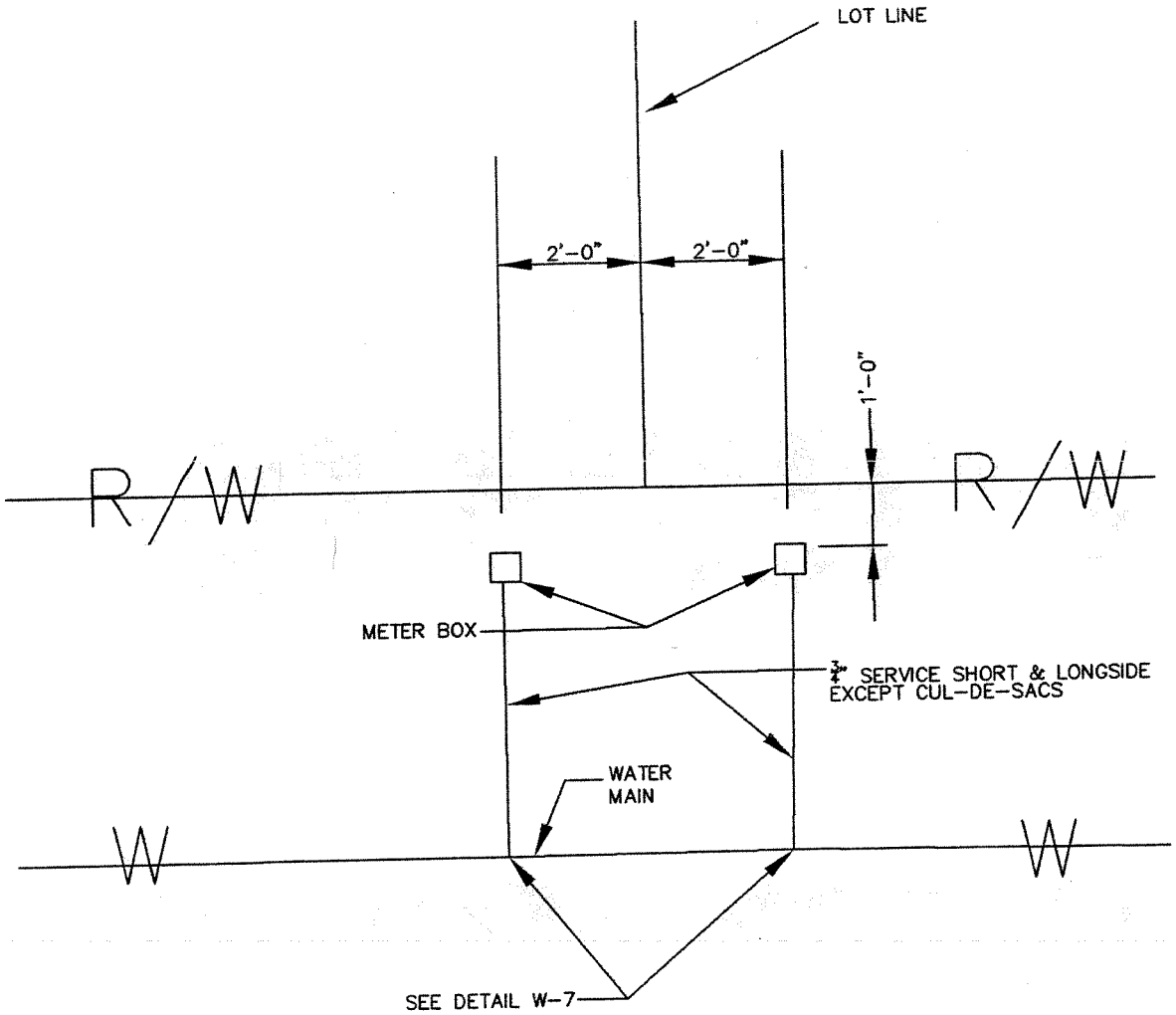

FULTON COUNTY ENGINEER'S OFFICE		
FULTON COUNTY STANDARD W-6 WATER SERVICES SINGLE SERVICE SCALE		
DSN DWN SEK CK'D REV	APPR'D DATE 3/19/04 COUNTY ENGR.	FILE NO. W-6

REVISIONS BY DATE

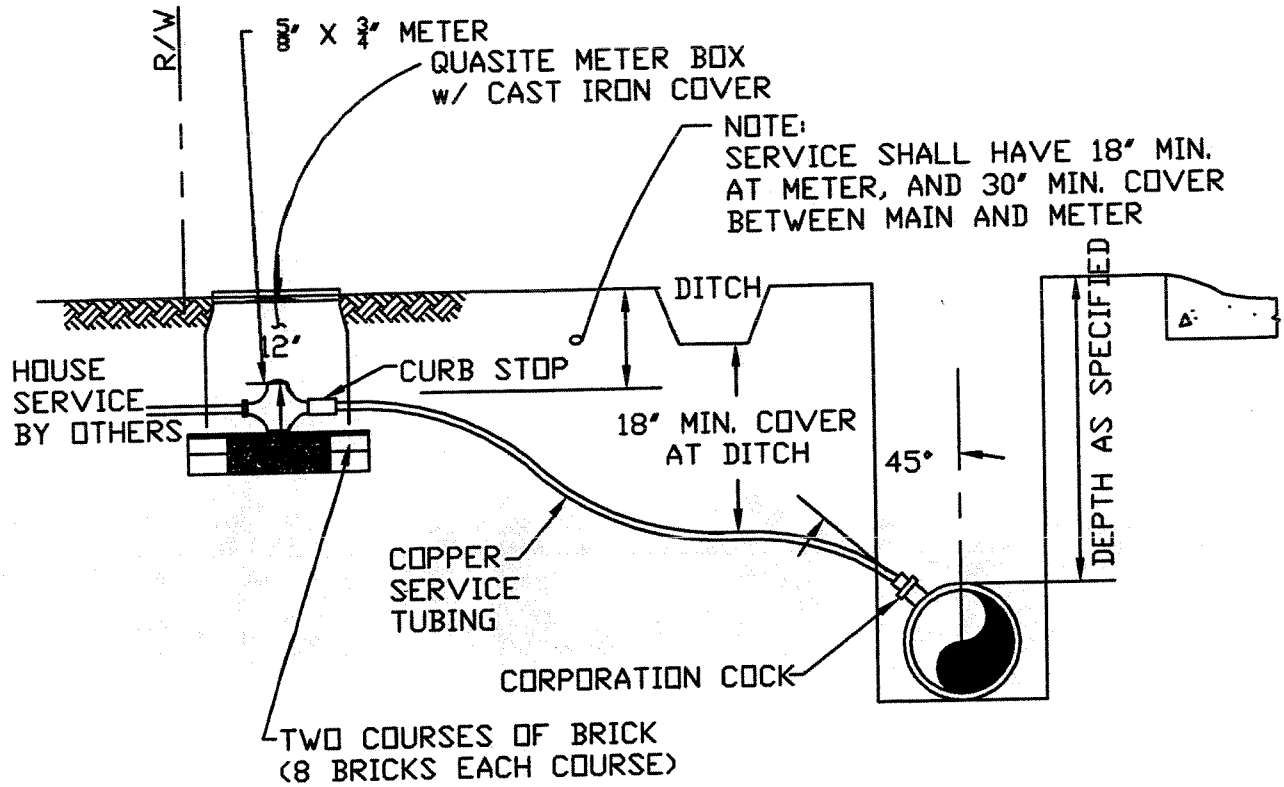

NOTES:

1. SERVICE LINE SHALL BE 2" DIAMETER FROM THE MAIN TO THE METER
2. USE ALL FLARE JOINTS.
3. INSTALLATION SHALL ALLOW ADEQUATE ROOM TO REMOVE AND/OR REPAIR METER.
4. METER BOX SHALL BE APPROXIMATELY 12" x 18".

REVISIONS / DATE / BY	FULTON COUNTY ENGINEER'S OFFICE	
	FULTON COUNTY STANDARD W-7 WATER SERVICE & METER CONNECTION SCALE	
DSN DWN SEK CK'D REV	APPR'D DATE 3/19/04 COUNTY ENGR.	FILE NO. W-7

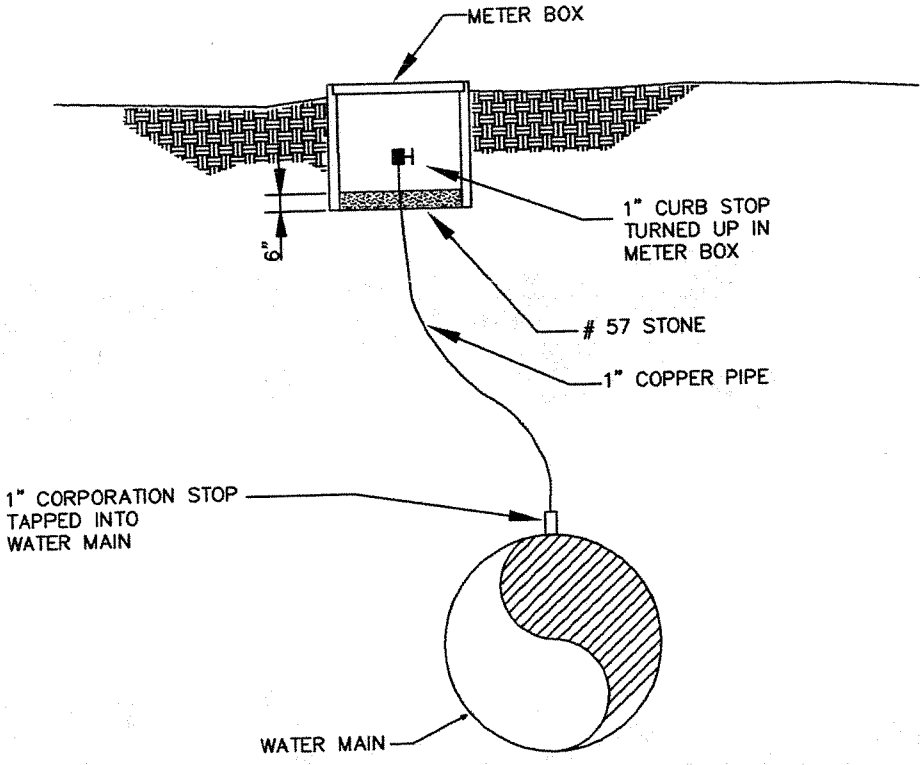

FULTON COUNTY ENGINEER'S OFFICE		
FULTON COUNTY STANDARD W-8 AIR VALVE MANUAL		
SCALE		
DSN DWN SEK CK'D REV	APPR'D DATE 3/19/04 COUNTY ENGR.	FILE NO. W-8

REVISIONS BY DATE

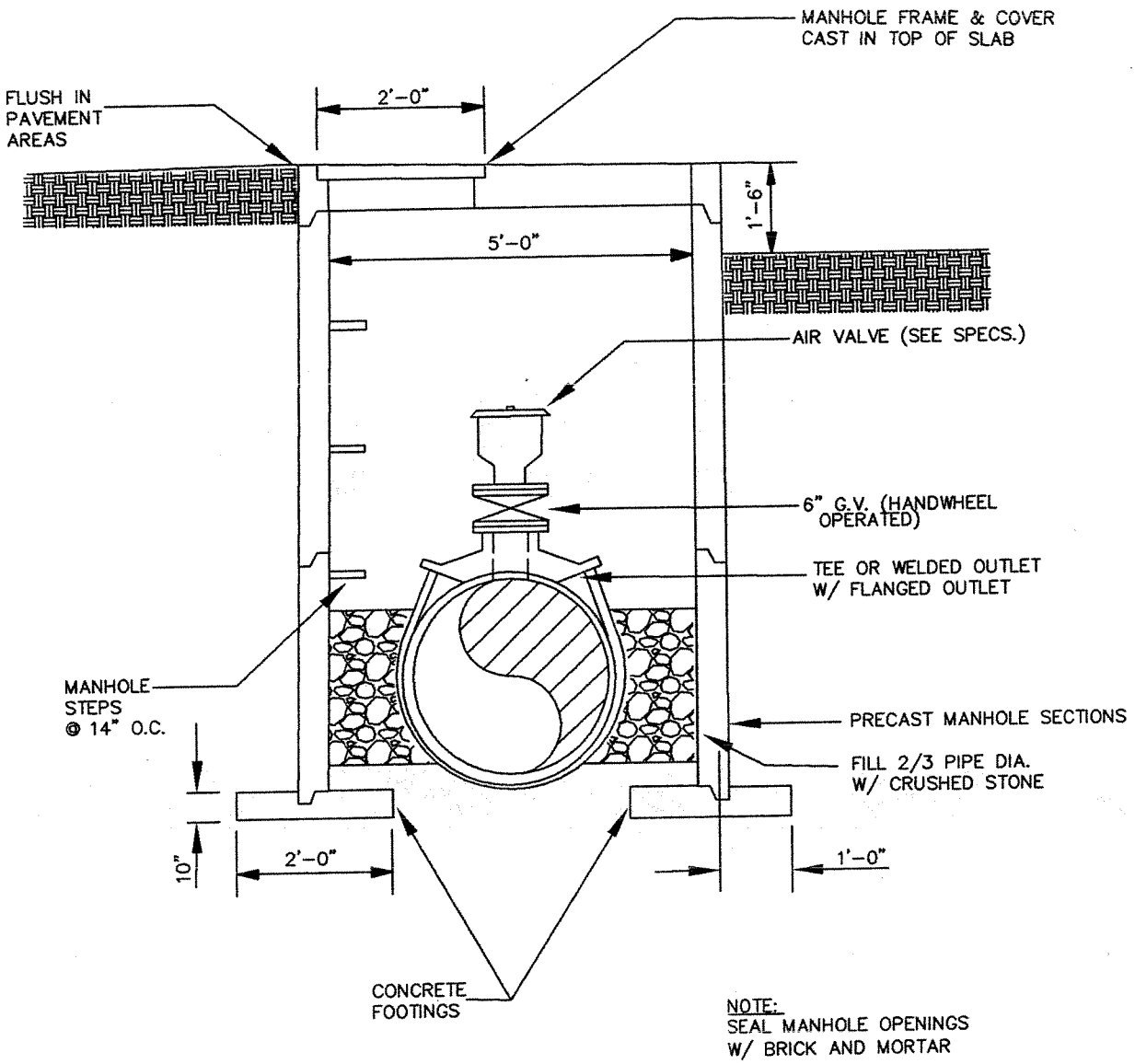

NOTE:
SEAL MANHOLE OPENINGS
W/ BRICK AND MORTAR

FULTON COUNTY ENGINEER'S OFFICE			
FULTON COUNTY STANDARD W-9 AIR VALVE AUTOMATIC			
SCALE			
DSN DWN SEK CK'D REV	APPR'D DATE 3/19/04 COUNTY ENGR.	FILE NO. W-9	

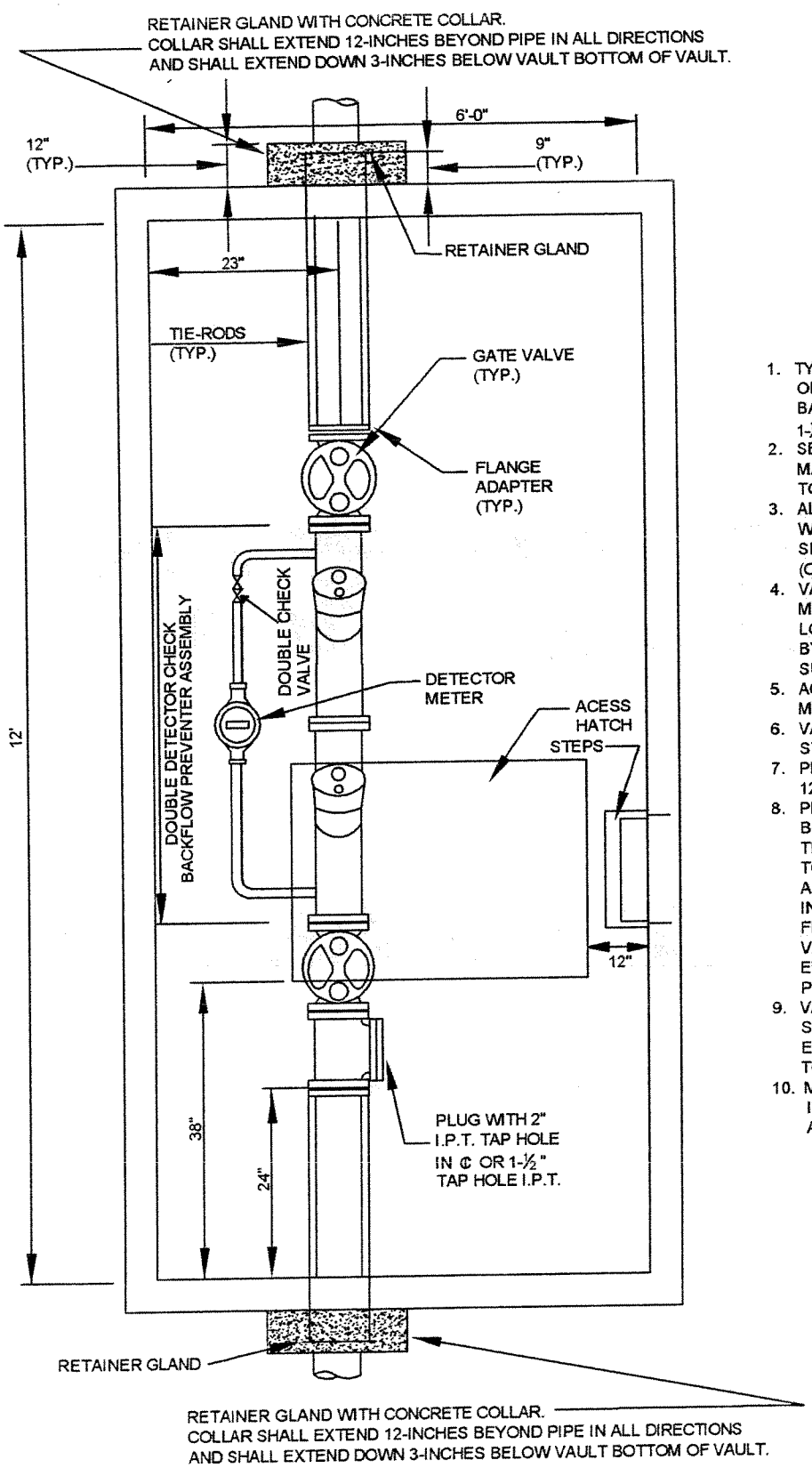

1. TYPE I VAULT SHALL BE USED FOR 3,4,6 OR 8-INCH DOUBLE DETECTOR CHECK BACKFLOW PREVENTER FOR USE WITH 1, 1-½ AND 2-INCH METER.
2. SEE SPECIFICATION SECTION 02665 FOR MATERIAL SPECIFICATIONS. ALL MATERIAL TO BE FURNISHED BY CONTRACTOR.
3. ALL FITTING SHALL BE DUCTILE IRON WITH FLANGED JOINTS. GATE VALVES SHALL BE OUTSIDE STEM AND YOKE (OSY) WITH HANDWHEEL.
4. VAULT SHALL BE PRECAST CONCRETE. MIN. INSIDE HEIGHT SHALL BE 6 FEET. LOAD BEARING VAULT SHALL BE DESIGNED BY PROPERTY OWNER'S ENGINEER, AND SUBMITTED TO COUNTY FOR APPROVAL.
5. ACCESS HATCH/FLOOR DOOR SHALL BE MIN. 36" X 36".
6. VAULT FLOOR SHALL BE # 57 CRUSHED STONE, MIN. 6-INCHES THICK.
7. PROVIDE CONCRETE PIER UNDER BFP 12" X 12" X 18" HIGH.
8. PROVIDE RETAINER GLAND ON PIPE BEYOND VAULT WALLS. PROVIDE TWO TIE RODS FROM FIRST INTERIOR FLANGE TO RETAINER GLANDS, WITH DOUBLE NUTS AND WASHERS. ENCASE RETAINER GLANDS IN CONCRETE. ALSO, PROVIDE TIE RODS FROM RETAINER GLAND TO TAPPING VALVE OR CASING UNDER ROAD, WHICH-EVER IS CLOSER. RODS SHALL BE PROVIDED WITH BITUMASTIC COATING.
9. VAULT WALL OPENINGS SHALL BE SEALED WITH NON-SHRINK GROUT. ENSURE 1-INCH CLEARANCE BETWEEN TOP OF PIPE AND PRECAST WALL.
10. MANHOLE STEPS SHALL BE DOWELLED INTO VAULT WALL AND CENTERED ON ACCESS HATCH.

REVISIONS	BY	DATE	FULTON COUNTY ENGINEER'S OFFICE
			FULTON COUNTY STANDARD W-10 FIRE LINE VAULT - TYPE I
			SCALE
DSN DWN SEK CK'D REV	APPR'D DATE 3/19/04 COUNTY ENGR.		FILE NO. W-10

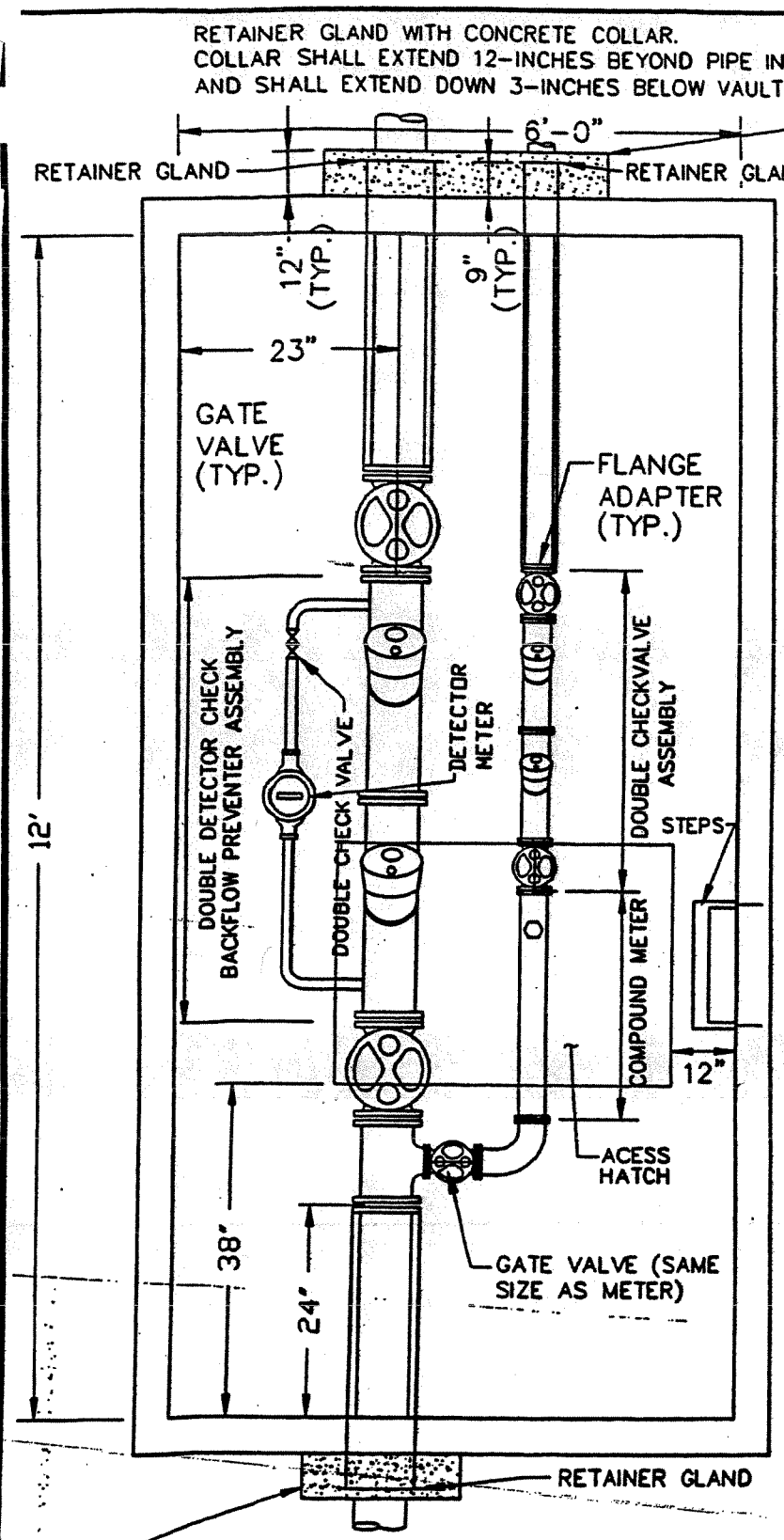

1. TYPE I VAULT SHALL BE USED FOR 6 OR 8-INCH DOUBLE DETECTOR CHECK BACKFLOW PREVENTER FOR USE WITH COMPOUND METERS. 3-INCH METERS WILL REQUIRE MIN. 6-INCH BFP AND 4-INCH METER WILL REQUIRE MIN. 8-INCH BFP. COMPOUND METERS SHALL BE PROVIDE WITH DOUBLE CHECK VALVE ASSEMBLIES.
2. SEE SPECIFICATION SECTION 02665 FOR MATERIAL SPECIFICATIONS. ALL MATERIAL TO BE FURNISHED BY CONTRACTOR.
3. ALL FITTING SHALL BE DUCTILE IRON WITH FLANGED JOINTS. GATE VALVES SHALL BE OUTSIDE STEM AND YOKE (OSY) WITH HANDWHEEL.
4. VAULT SHALL BE PRECAST CONCRETE. MIN. INSIDE HEIGHT SHALL BE 6 FEET. LOAD BEARING VAULT SHALL BE DESIGNED BY PROPERTY OWNER'S ENGINEER, AND SUBMITTED TO COUNTY FOR APPROVAL.
5. ACCESS HATCH/FLOOR DOOR SHALL BE MIN. 36" X 36".
6. VAULT FLOOR SHALL BE # 57 CRUSHED STONE, MIN.6-INCHES THICK.
7. PROVIDE CONCRETE PIER UNDER BFP MIN. 12" X 12" X 18" HIGH. PROVIDE ADDITIONAL PIPE SUPPORT UNDER EACH END OF BFP ASSEMBLY.
8. PROVIDE RETAINER GLAND ON PIPE BEYOND VAULT WALLS. PROVIDE TWO TIE RODS FROM FIRST INTERIOR FLANGE TO RETAINER GLANDS, WITH DOUBLE NUTS AND WASHERS. ENCASE RETAINER GLANDS IN CONCRETE. ALSO, PROVIDE TIE RODS FROM RETAINER GLAND TO TAPPING VALVE OR CASING UNDER ROAD, WHICH-EVER IS CLOSER. RODS SHALL BE PROVIDED WITH BITUMASTIC COATING.
9. VAULT WALL OPENINGS SHALL BE SEALED WITH NON-SHRINK GROUT. ENSURE 1-INCH CLEARANCE BETWEEN TOP OF PIPE AND PRECAST WALL.
10. MANHOLE STEPS SHALL BE DOWELLED INTO VAULT WALL AND CENTERED ON ACCESS HATCH.

	STANDARD DETAILS	DATE : JULY 2000
		SCALE : NONE
	FIRE LINE – TYPE II	DETAIL NO. W-11

ASSUMPTIONS FOR STANDARD LENGTHS

PIPE: DUCTILE IRON, AWWA C-151
SOIL: GC & SC. CLAYEY GRAVELS, CLAYEY SANDS, GRAVEL-SAND-CLAY MIXTURES, SAND-CLAY MIXTURES.
AVERAGE DEPTH OF BURY: 4 FT
TRENCH TYPE: 4
TEST PRESSURE: 250 PSI
SAFETY FACTOR: 1.5:1 (BASED ON TEST PRESSURE)

NOTES:

1. A FULL LENGTH OF PIPE ATTACHED TO EACH SIDE RUN OR BRANCH OUTLET SHALL BE INSTALLED, NO CUT OR PIECE OF PIPE SHALL BE USED.
2. WHERE FILL DIRT HAS BEEN ADDED TO SHOULDER, DEADMAN WILL BE INSTALLED 10 FT, FROM ANY BRANCH OUTLET OR END PIPE.
3. ALL JOINTS THAT FALL WITHIN THESE STANDARD LENGTH SHOULD BE RESTRAINED. (ON EACH SIDE OF BENDS ON THE BRANCH OUTLET OF TEES, AND BEFORE DEAD-ENDS).
4. STANDARD LENGTHS SHALL BE MODIFIED IF ACTUAL CONDITIONS DO NOT MEET MINIMUM REQUIREMENTS IN "ASSUMPTIONS FOR STANDARD LENGTHS".

RECOMMENDED RESTRAINED LENGTHS OF DUCTILE IRON PIPE

NOM. PIPE SIZE (IN)	90 DEG. BEND	45 DEG. BEND	22.5 DEG. BEND	11.25 DEG. BEND	SIZE ON SIZE TEE*	VALVE/ DEAD-END
6	19 FT	8 FT	4 FT	2 FT	3 FT	35 FT
8	25 FT	11 FT	5 FT	3 FT	13 FT	46 FT
10	30 FT	13 FT	6 FT	3 FT	23 FT	56 FT
12	36 FT	15 FT	7 FT	4 FT	34 FT	67 FT
14	41 FT	17 FT	8 FT	4 FT	43 FT	77 FT
16	46 FT	19 FT	9 FT	5 FT	53 FT	87 FT
18	51 FT	21 FT	10 FT	5 FT	63 FT	96 FT
20	56 FT	23 FT	11 FT	6 FT	72 FT	106 FT
24	65 FT	27 FT	13 FT	7 FT	91 FT	126 FT

*RECOMMENDED RESTRAINED LENGTHS FOR TEES ARE FOR THE BRANCH OUTLET AND ASSUME A MINIMUM 10 FT. SECTION OF PIPE ATTACHED TO EACH SIDE OF THE RUN. RESTRAINT DEVICES SHOULD ALSO BE INSTALLED ON BOTH RUN JOINTS OF THE TEE ITSELF.

REVISIONS BY DATE	FULTON COUNTY ENGINEER'S OFFICE	
	FULTON COUNTY STANDARD W-11 RESTRAINED JOINT PIPE STANDARD LENGTHS SCALE	
	DSN ___ DWN SEK CK'D REV	APPR'D DATE 3/19/84 COUNTY ENGR.	FILE NO. W-12