EAST ROSWELL LIBRARY
ADDENDUM NO. 03.1-3
APRIL 25, 2013

This Addendum No. 03.1-3 dated April 25, 2013 issued by Ajax Building Corporation of Georgia is hereby made part of Bid Package 03.1 – CONCRETE for the East Roswell Library. The changes and/or clarifications included in this Addendum shall be considered as part of the Bidding Documents and shall supersede, amend, add to, or subtract from those conditions included in the original Bidding Documents, including the Project Bid Package, Drawings, Specifications, previous Addenda, etc. This Addendum must be acknowledged in the space provided on the Proposal Form (included in Section II of the Bid Package). Failure to acknowledge this Addendum may subject Bidder to disqualification.

1. PRE-BID REQUESTS FOR INFORMATION

   A. Incorporate Pre-Bid RFI No. 1 dated April 25, 2013 issued by KHAFRA (total of 1 page).
   B. Incorporate Pre-Bid RFI No. 2 dated April 25, 2013 issued by KHAFRA (total of 1 page).
   C. Incorporate Pre-Bid RFI No. 3 dated April 25, 2013 issued by KHAFRA (total of 1 page).
   D. Incorporate Pre-Bid RFI No. 4 dated April 25, 2013 issued by KHAFRA (total of 1 page).
   E. Incorporate Pre-Bid RFI No. 6 dated April 25, 2013 issued by KHAFRA (total of 1 page).
   F. Incorporate Pre-Bid RFI No. 7 dated April 25, 2013 issued by KHAFRA (total of 1 page).
   G. Incorporate Pre-Bid RFI No. 8 dated April 25, 2013 issued by KHAFRA (total of 1 page).

2. OTHER CLARIFICATIONS

   A. Incorporate the following clarifications based on questions from bidders:

      1. Q: Cannot find a footing schedule in the plans for the job.
         A: Footing schedule is on sheet S7.00.

      2. Q: On (S1.04) section cuts 2, 3, and 4 there is 1" composite deck called out. The picture seems to show some type of flat material.
         A: For product information reference specification 061000, item 2.7, Rough Carpentry. Also reference Architectural sheet A3.20.

      3. Q: Are concrete pads for mechanical equipment required to be provided by the mechanical contractor?
         A: Include what is listed in your package's scope of work.

      4. Q: Are all architectural louvers, including the 16.5'x14' louver shown on A3.10, to be provided by (BP 23.1) the mechanical contractor?
         A: Yes. Reference BP 23.1 HVAC & Controls Scope of Work items B.2-1-F and B.2-6.

      5. Q: Can insulation be omitted on indoor loop water supply and return piping?
         A: No. Specification 230700-3.13-A indicates insulation requirements for indoor loop water supply and return piping.

      6. Q: Is the BAS intended to be a part of the (BP 23.1) mechanical scope of work or bid directly to the construction manager? The bid package scope conflicts with note 1.12 C in section 230900.

A: In order to guarantee a complete scope the Building Management and Controls System is included in BP 23.1 HVAC & Controls.

7. Q: Is Honeywell an approved manufacturer for the building automation system?
   A: Reference specification section 230900 Direct Digital Control System for manufacturer requirements. BP 23.1 HVAC & Controls shall indicate their intended controls manufacturer at time of bid submission.

END OF ADDENDUM NO. 03.1-3

ATTACHMENTS: ATTACHMENTS: Pre-Bid RFI No. 1 (1 pages)
Pre-Bid RFI No. 2 (1 pages)
Pre-Bid RFI No. 3 (1 pages)
Pre-Bid RFI No. 4 (1 pages)
Pre-Bid RFI No. 6 (1 pages)
Pre-Bid RFI No. 7 (1 pages)
Pre-Bid RFI No. 8 (1 pages)

XC: All BP 03.1 Bidders
FTP Site – Bid Documents

PRE-BID REQUEST FOR INFORMATION ("RFI")

Job Id: 201209 **Name:** East Roswell Library **Question from:** RAI Industrial Fabricators, LLC	**RFI No.** 001 **Reference:** A3.10, A3.20, S1.04, 051200, 055000 **Issue Date:** **04/23/2013** **Requested by:** **04/24/2013**
Issued To: Khafra Attn: John Ray 1601 5th Avenue, North Birmingham, AL 35203 jray@khafra.com	**Issued By:** Ajax Building Corporation Attn: Rebecca Bailey 5950 Shiloh Road East, Suite S Alpharetta, GA 30005 rebecca@ajaxbuilding.com

RFI Question:

Please confirm surface preparation requirements for bent tube steel "branches" at Pedestrian Entrance Bridge, and other exposed structural steel members.

1. Please confirm "bent tube branches" at Pedestrian Entrance Bridge are considered AESS (Architecturally Exposed Structural Steel) and shall receive SSPC-SP 6 "Commercial Blast Cleaning" per Metal Fabrications spec 055000-2.17-C-1.

2. Please confirm the structural steel members of the Pedestrian Entrance Bridge are considered AESS and shall receive SSPC-SP 6 "Commercial Blast Cleaning".

3. There are instances on the interior of the building where structural steel is exposed, please advise if these are to be considered AESS (Architecturally Exposed Structural Steel), and what level of surface preparation they are to receive.
   - Per AISC SSPC-SP 3 "Power Tool Cleaning" is the minimum level for most AESS projects. SSPC-SP 6 "Commercial Blast Cleaning" may be needed for surface prep on members under a certain elevation.
   - Structural Steel Framing spec 051200-2.7-B indicates Surface Preparation levels SSPC-SP 2 "Hand Tool Cleaning" and SSPC-SP 3 "Power Tool Cleaning".

Receiver's Reply:

1. Confirmed.
2. Confirmed.
3. They are to be considered AESS. Provide SSPC-SP6 on columns from the finish floor to a height of 20'. All other interior AESS to receive SSPC-SP3.

Reply Date: April 25, 2013

References: None

Spec Section Codes:

None

Attachments:

• Type:

None

Note: This reply is not an authorization to proceed with work involving additional cost, time or both. If any reply requires a change to the Contract Documents, a Change Order, Construction Change Directive or a Minor Change in the work must be executed in accordance with the Contract Documents.

PRE-BID REQUEST FOR INFORMATION ("RFI")

Job Id: 201209 **Name:** East Roswell Library **Question from:** Duct supplier for Air Conditioning Specialist, Inc.	**RFI No.** 002 **Reference:** 230700, 233113 **Issue Date:** **04/23/2013** **Requested by:** **04/24/2013**
Issued To: Khafra Attn: John Ray 1601 5th Avenue, North Birmingham, AL 35203 jray@khafra.com	**Issued By:** Ajax Building Corporation Attn: Rebecca Bailey 5950 Shiloh Road East, Suite S Alpharetta, GA 30005 rebecca@ajaxbuilding.com

RFI Question:

1. Please confirm perforated sheet metal inner duct is to be used at liner locations in rectangular ducts per Metal Ducts spec 233113-2.7-I.

2. Please clarify duct liner locations, observed differences have been underlined for convenience:
   a. Metal Ducts spec 233113-2.3-A indicates 1" thick duct liner at all above ceiling return air ducts and transfer/return air boots serving VVR (Variable Volume Refrigerant) systems.
   b. HVAC Insulation spec 230700-3.11-B indicates 1" thick duct liner at all return air ducts, transfer/return air boots, all supply ducts in the mechanical room and the first 15 feet of all supply ducts that extend into the under floor plenum.

Receiver's Reply:

1. Delete reference to perforated sheet metal inner duct. No perforated sheet metal inner ducts are required.
2. Duct liner locations shall be observed per HVAC Insulation spec 230700-3-11-B, which includes all return air ducts, transfer/return boots (this includes all above ceiling return air duct and transfer/return air serving the VVR or Mitsubishi type units referred in spec 233113-2-3-A). Duct liner locations also include all supply ducts in the mechanical room, which refers to the supply ducts leaving HP-1 and HP-2 and the first 15 feet of any of these supply ducts that extend into the under floor plenum. We want lined ductwork instead of wrap on these supply ducts.

Reply Date: ~~**4/22/2013**~~ 4/25/2013

References:

Spec Section Codes:

Attachments:

• Type:

Note: This reply is not an authorization to proceed with work involving additional cost, time or both. If any reply requires a change to the Contract Documents, a Change Order, Construction Change Directive or a Minor Change in the work must be executed in accordance with the Contract Documents.

PRE-BID REQUEST FOR INFORMATION ("RFI")

Job Id: 201209 **Name:** East Roswell Library **Question from:** ASCA Inc.	**RFI No.** 003 **Reference:** 084413 **Issue Date:** **04/23/2013** **Requested by:** **04/25/2013**
Issued To: Khafra Attn: John Ray 1601 5th Avenue, North Birmingham, AL 35203 jray@khafra.com	**Issued By:** Ajax Building Corporation Attn: Rebecca Bailey 5950 Shiloh Road East, Suite S Alpharetta, GA 30005 rebecca@ajaxbuilding.com

RFI Question:

The attached Substitution Request for the Sunshades has been received. The manufacturer's request is that the source limitation noted in 084413-2.1-A-3 (that it be the same manufacturer as the Aluminum Entrances and Storefronts, and sliding Automatic Doors) be waived, and that they be approved.

We have received a similar request from another Sunshade manufacturer as well, which is being submitted as a separate RFI for clarity.

Receiver's Reply:

The single source limitation noted in sections 084113, 084229, and 084413 should be deleted. Multiple sources for these items will be acceptable, however the finishes are to be as closely matched as possible.
ASCA Inc. is approved as a manufacturer for 084113 Aluminum Sunshades subject to compliance with the specifications.

Reply Date: April 25, 2013

References:

None

Spec Section Codes:

None

Attachments:

- Type: Manufacturer info, 15 pages (pdf)

Note: This reply is not an authorization to proceed with work involving additional cost, time or both. If any reply requires a change to the Contract Documents, a Change Order, Construction Change Directive or a Minor Change in the work must be executed in accordance with the Contract Documents.

PRE-BID REQUEST FOR INFORMATION ("RFI")

Job Id: 201209 **Name:** East Roswell Library **Question from:** Robert Bates Company, representing Colt / Linel	**RFI No.** 004 **Reference:** 084413 **Issue Date:** **04/23/2013** **Requested by:** **04/25/2013**
Issued To: Khafra Attn: John Ray 1601 5th Avenue, North Birmingham, AL 35203 jray@khafra.com	**Issued By:** Ajax Building Corporation Attn: Rebecca Bailey 5950 Shiloh Road East, Suite S Alpharetta, GA 30005 rebecca@ajaxbuilding.com

RFI Question:

The attached Substitution Request for the Sunshades has been received. The manufacturer's request is that the source limitation noted in 084413-2.1-A-3 (that it be the same manufacturer as the Aluminum Entrances and Storefronts, and sliding Automatic Doors) be waived, and that they be approved.

We have received a similar request from another Sunshade manufacturer as well, which is being submitted as a separate RFI for clarity.

Receiver's Reply:

The single source limitation noted in sections 084113, 084229, and 084413 should be deleted. Multiple sources for these items will be acceptable, however the finishes are to be as closely matched as possible.
Robert Bates Company, representing Colt / Linel is approved as a manufacturer for 084113 Aluminum Sunshades subject to compliance with the specifications.

Reply Date: April 25, 2013

References:

None

Spec Section Codes:

None

Attachments:

- Type: Manufacturer info, 8 pages (pdf)

Note: This reply is not an authorization to proceed with work involving additional cost, time or both. If any reply requires a change to the Contract Documents, a Change Order, Construction Change Directive or a Minor Change in the work must be executed in accordance with the Contract Documents.

PRE-BID REQUEST FOR INFORMATION ("RFI")

Job Id: 201209 **Name:** East Roswell Library	**RFI No.** 006 **Reference:** 2/A5.70, A3.10 **Issue Date:** **04/23/2013** **Requested by:** **04/30/2013**
Issued To: Khafra Attn: John Ray 1601 5th Avenue, North Birmingham, AL 35203 jray@khafra.com	**Issued By:** Ajax Building Corporation Attn: Rebecca Bailey 5950 Shiloh Road East, Suite S Alpharetta, GA 30005 rebecca@ajaxbuilding.com

RFI Question:

Please provide Body Length and Offset Size for downspout boots.

Receiver's Reply:
Piedmont Pipe Downspout - Model SO

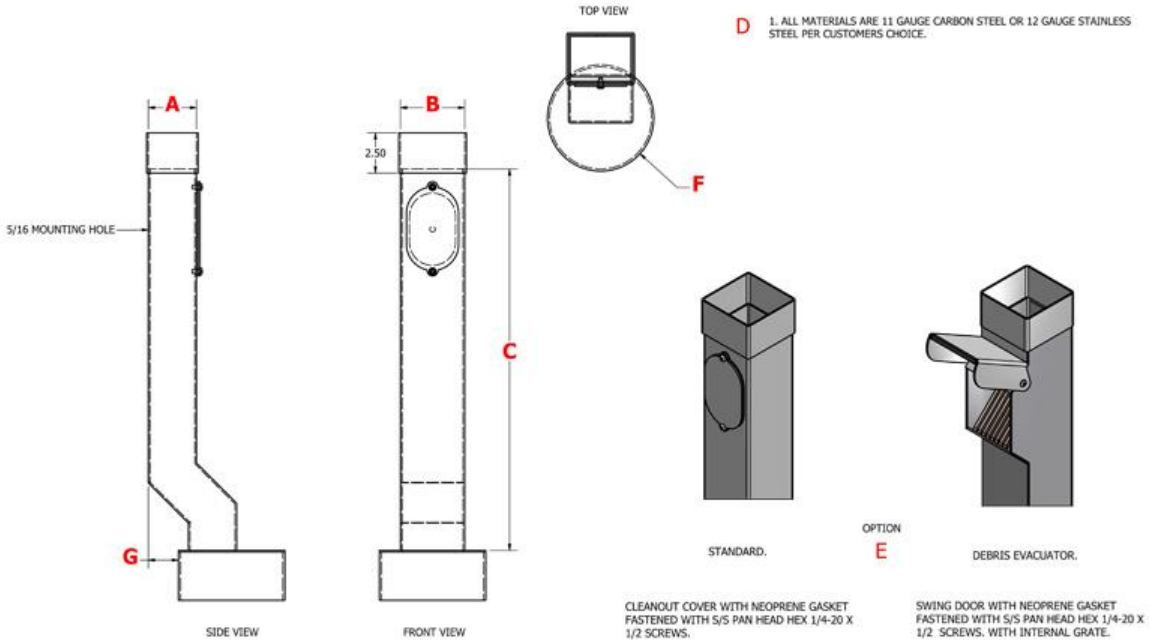

A: To Receive 8" Diameter OD Downspout
B: To Receive 8" Diameter OD Downspout
C: 24"
D: 304 Carbon Steel with Manufacturer's standard black finish
E: Standard Cleanout
F: To connect to 8" Storm drain
G: 4" off set

Note: This reply is not an authorization to proceed with work involving additional cost, time or both. If any reply requires a change to the Contract Documents, a Change Order, Construction Change Directive or a Minor Change in the work must be executed in accordance with the Contract Documents.

PRE-BID REQUEST FOR INFORMATION ("RFI")

Reply Date: April 25, 2013

References:

None

Spec Section Codes:

None

Attachments:

- Type:

Note: This reply is not an authorization to proceed with work involving additional cost, time or both. If any reply requires a change to the Contract Documents, a Change Order, Construction Change Directive or a Minor Change in the work must be executed in accordance with the Contract Documents.

PRE-BID REQUEST FOR INFORMATION ("RFI")

Job Id: 201209 **Name:** East Roswell Library **Question from:** American Window and Door	**RFI No.** 007 **Reference:** Spec 088000-2.2-F, A8.30,A10.20 **Issue Date:** **04/23/2013** **Requested by:** **04/30/2013**
Issued To: Khafra Attn: John Ray 1601 5th Avenue, North Birmingham, AL 35203 jray@khafra.com	**Issued By:** Ajax Building Corporation Attn: Rebecca Bailey 5950 Shiloh Road East, Suite S Alpharetta, GA 30005 rebecca@ajaxbuilding.com

RFI Question:

Please indicate color selections for laminated glass at Children's Entry small accent windows.

Receiver's Reply:

Specification Section 088000 2.2 F Clarifies the requirements for the Laminated Glass at the Children's Entry. The windows have a colored interlayer between the glass panes. The glass is clear. The colors of the interlayers will be selected at a later date.

Reply Date: April 25, 2013

References:

None

Spec Section Codes:

None

Attachments:

• Type:

Note: This reply is not an authorization to proceed with work involving additional cost, time or both. If any reply requires a change to the Contract Documents, a Change Order, Construction Change Directive or a Minor Change in the work must be executed in accordance with the Contract Documents.

PRE-BID REQUEST FOR INFORMATION ("RFI")

Job Id: 201209 **Name:** East Roswell Library **Question from:** Mid South Steel	**RFI No.** 008 **Reference:** S1.01, S1.04 **Issue Date:** **04/24/2013** **Requested by:** **04/25/2013**
Issued To: Khafra Attn: John Ray 1601 5th Avenue, North Birmingham, AL 35203 jray@khafra.com	**Issued By:** Ajax Building Corporation Attn: Rebecca Bailey 5950 Shiloh Road East, Suite S Alpharetta, GA 30005 rebecca@ajaxbuilding.com

RFI Question:

On sheet S1.01 the support columns for the Pedestrian Entrance Bridge are indicated as HSS 8x8x1/4. On section 2/S1.04 these columns are indicated as HSS 6x6x1/4; the same size indicated in the 50% documents. Please clarify.

Receiver's Reply:

The 8x8x1/4 is the correct size.

Reply Date: April 25, 2013

References:

None

Spec Section Codes:

None

Attachments:

• Type:

Note: This reply is not an authorization to proceed with work involving additional cost, time or both. If any reply requires a change to the Contract Documents, a Change Order, Construction Change Directive or a Minor Change in the work must be executed in accordance with the Contract Documents.