EAST ROSWELL LIBRARY
ADDENDUM NO. 09.1-2
APRIL 22, 2013

This Addendum No. 09.1-2 dated April 22, 2013 issued by Ajax Building Corporation of Georgia is hereby made part of Bid Package 09.1 – DRYWALL, FRAMING & STUCCO for the East Roswell Library. The changes and/or clarifications included in this Addendum shall be considered as part of the Bidding Documents and shall supersede, amend, add to, or subtract from those conditions included in the original Bidding Documents, including the Project Bid Package, Drawings, Specifications, previous Addenda, etc. This Addendum must be acknowledged in the space provided on the Proposal Form (included in Section II of the Bid Package). Failure to acknowledge this Addendum may subject Bidder to disqualification.

1. PRE-BID CONFERENCE

   A. Incorporate Pre-Bid Conference Meeting Minutes, Pre-Bid RFI Form, and Sign-In Sheets. (total of 7 pages).

2. PROPOSAL FORM

   A. Note N/A (Not Applicable) in Proposal Form section regarding Bid Security, bottom of page 3, Item 4. Bid Security is not required.

3. ADDENDA ISSUED BY DESIGN PROFESSIONAL

   A. Incorporate Addendum No. 1 dated April 16, 2013 issued by KHAFRA (total of 5 pages, 3 of which are plan sheets).

END OF ADDENDUM NO. 09.1-2

ATTACHMENTS: Pre-Bid Conference Meeting Minutes (4 pages)
Pre-Bid RFI Form (1 page)
Pre-Bid Conference Sign-In Sheets (2 pages)
KHAFRA Addendum No. 1 (5 pages)

XC: All BP 09.1 Bidders
FTP Site – Bid Documents

PRE-BID CONFERENCE MEETING MINUTES

1. Date of Pre-Bid Conference: April 18, 2013 / 3:00 PM

2. Location of Pre-Bid Conference: East Roswell Park Community Room

3. Bid Packages included in Bid Group A: Bid Packages
   2.1 Sitework & Utilities
   3.1 Concrete
   4.1 Masonry
   5.1 Structural & Miscellaneous Metals

4. Bid Packages included in Bid Group B: Bid Packages
   7.1 Roofing
   8.2 Glass, Glazing, Storefront, & Sun Control
   9.1 Drywall, Framing & Stucco
   23.1 HVAC & Controls
   26.1 Electrical

5. Bid Date for Bid Groups A and B: May 2, 2013 / 2:00 PM Local Time

6. Bid Delivery Options:

   Mailed or Hand Delivered Bids
   Fulton County Department of Purchasing and Contract Compliance
   c/o Ajax Building Corporation – East Roswell Library, Fulton County Public Safety Building
   130 Peachtree Street, S.W., Suite 1168, Atlanta GA 30303

   E-mailed or Faxed Bids
   Attn: Linda Walton
   Email: Linda.Walton@fultoncountyga.gov (copy to: rebecca@ajaxbuilding.com)
   Fax #: 404-335-5029

7. Pre-Bid Conference Attendees: Sign-In Sheet was passed around the room.

8. The Pre-Bid Conference was NOT mandatory.

9. Introduction of Project Team
   A. Fulton County- Atlanta – Fulton Public Library System — Owner
   B. Ajax Building Corporation of Georgia — Construction Manager
   C. HBM — Library Design Architect
   D. KHAFRA — Architect of Record
   E. KHAFRA — Structural/Electrical/Mechanical Engineer

10. Project Description and Scope
    A. Site Plan
    B. East Roswell Library will be located in the City of Roswell (Fulton County) on a 2.7 acre wooded corner of East Roswell Park at the intersection of Holcomb Bridge Road and Fouts Road. The new library is an approximately 17,000 SF primarily single-story building with a construction budget of 4.9 million. Project is anticipated to be LEED "Silver" and one of the main focuses of the design is a connection with the

wooded surroundings to create a functional library space within a canopy of trees. Sitework is expected to commence in June 2013 with completion in 2014.

11. The agreement will only be entered into with responsible subcontractors found to be satisfactory to the Owner and the Construction Manager, qualified by experience and in a financial position to do the work specified. The bidder must, upon request, be able to prove his financial ability to carry on the work until such time as he received his first payment, and to finance the work between payments until the contract is completed and accepted.
    A. Ajax's standard Bidder Qualifications Questionnaire is available on Ajax's FTP Site for this project.

12. Bidding Documents
    A. Are currently available
    B. Documents Include:
        1. Bid Package – Posted on Fulton County's Bid Board & Ajax FTP Site
        2. Drawings and Specifications – Posted on Ajax's FTP Site
        3. Addenda issued during the Bidding Phase- Will be posted on Fulton County's Bid Board and Ajax FTP Site.
    C. All changes and/or clarifications to the Bidding Documents will be issued by Ajax Building Corporation in the form of Addenda.
        1. All Addenda issued by the Architect, Engineers and/or Owner will be incorporated into Addenda issued by Ajax Building Corporation.
        2. The Ajax Addenda numbering convention will be specific to each bid package. For example, the first Ajax Addendum for BP 3.1 Concrete will be "Addendum No. 03.1-1".
    D. Electronic Document Distribution.
    The drawings and specifications are available on the Ajax FTP site at the address listed below.

FTP Site Address:	ftp://ftp.ajaxbuilding.com/
Web Access:	http://ftp.ajaxbuilding.com/
Username:	eastroswellsub
Password:	201209sub

    E. Documents can also be reviewed at Ajax's Office, or a CD with plans/specifications picked up.
        1. Please call ahead to schedule.
    F. Review Pre-Bid RFI Requirements
        1. Forms and Procedures
        2. Goal to have all RFI's submitted by 04/22/13
        3. Goal to issue final Addenda by 04/24/13 or 04/25/13. (i.e. 1 week before bids are due)
        4. All questions and all answers will be provided to all bidders by Addenda.
        5. All Pre-Bid RFI's are to be sent to Ajax Building Corporation via email to: rebecca@ajaxbuilding.com
    G. Substitutions – Only if approved in writing by Addenda.
        1. (Alternatively, these may be listed in the Voluntary Alternates section of the Proposal Form.)

13. Bid Package Review
    A. General Review of Bid Package Contents
    B. Detailed Review of Proposal Form
        1. Proposal Form Review
            a. Base Bid
            b. Breakdown of Base Bid as required on Bid Proposal Form
            c. Bid Package Alternates
                i. Refer to Bid Package, Schedule "A", Item B.5
                ii. Shall be held good for the period indicated

iii. May be used as a basis of selection by the Owner and Construction Manager.

d. Voluntary Alternates
   i. Examples include:
      i. Bid Adjustments for Value Engineering Options.
      ii. Bid Adjustments for Alternative Materials and/or Equipment.
   ii. Shall be held good for a minimum of 120 days.
   iii. Will be considered and may be used as a basis of selection by the Owner and Construction Manager.

e. List cost of Payment and Performance Bonds
   i. Bidder shall provide Lump Sum amount for bond cost related to their Base Bid.
   ii. Bidder shall provide percentage (%) for alternates (add or deduct).

f. Bid Security section can be marked as N/A, Item 4.

g. List Addenda on Proposal Form – Include issuing firm (example: "Ajax Building Corporation Addendum # X dated XX/XX/XX").

h. Bidder information.

i. "Live" Officers signature.

j. Seal only applicable for Corporations.

2. Bid Security Requirements
   a. None. Bid Security is not required.
3. Bid Submittal Requirements
   a. Bids shall be on the form provided by Ajax and may be Mailed, Hand Delivered, Emailed, or Faxed. Location information is listed on the first page of these minutes. See Bid Package for specific requirements.
   b. Exceptions to the Bid Proposal Forms are not allowed. If a bidder has an exception to any portion of the Contract Documents, it must be submitted in writing for approval prior to the Bid date. Acceptance will be issued via addendum.
4. Opening of Bids
   a. Ajax Building Corporation will meet with the Owner to open all bids.
   b. Bid opening will NOT be public.
   c. Final bid tabulations will be provided to Fulton County.
5. All Bids shall be held good for 90 days

C. Review Subcontract Agreement

D. Review Schedule "A" – Scope of Work
   1. Particularly note section B.3 – Additional Project Specific Requirements. An example discussed was BIM (Building Information Modeling) shop drawing requirements for the following trades: Structural, Mechanical, Electrical, Plumbing, and Fire Protection.

14. Questions from the attendees:
   1. Q: How will OCIP (Owner Controlled Insurance Program) affect my bid?
      A1: For the purpose of bidding, there is no effect. Include the cost for all typical and required insurance in your bid price.
      A2: If awarded a subcontract, there will be an enrollment process for the OCIP program. This affects post-award General Liability Insurance only, and only while on the project site.

   2. Q: What is the anticipated schedule for the building pad Surcharge?
      A: The surcharging process is expected to take approximately two months. Specific surcharge activities are shown on the responsibility-sort schedule in Bid Package 2.1 Sitework & Utilities. The surcharge is an additive alternate for Bid Package 2.1 Sitework & Utilities.

3. Q: What is the threshold for bonding being required?
   A: Payment/Performance Bonds will be required for subcontracts $100,000 and greater.

4. Q: For contracts above the bonding threshold, are there any other options available?
   A: Ajax has used a "Subguard" insurance program in lieu of bonding in the past. Participation in this program is not guaranteed, and would be determined on a case-by-case basis.

5. Q: When would shop drawings and submittals be due?
   A: Submittal preparation would be expected to start within 10 days of subcontract award. It is understood that more time may be needed for preparation of detailed shop drawings compared to basic product data. The site surcharging period should help give ample time for this process.

6. Q: Is this a David-Bacon project?
   A: No.

7. Q: Is it required that full packages be bid?
   A: Yes, Ajax intends to award all packages in Groups A and B as full packages. An example discussed was paving, which is a part of the full Bid Package 2.1 Sitework & Utilities. Ajax can assist sub-subs with making contact with prime subs.

8. Q: Is there any additional bidding information expected.
   A: Yes. The minutes of this meeting will be issued via addenda, and along with that will be issued a clarification on the fire line size. Any subsequent addenda would be solely to answer questions from bidders.

9. Q: Is there a minimum number of bids required for subcontract award.
   A: Yes, three bids for each package are required by Fulton County.

PRE-BID REQUEST FOR INFORMATION ("RFI")

Job Id: 201209 **Name:** East Roswell Library	**RFI No.** **Reference:** **Issue Date:** **Requested by:**
Issued To: Ajax Building Corporation Attn: Rebecca Bailey 5950 Shiloh Road East, Suite S Alpharetta, GA 30005 rebecca@ajaxbuilding.com	**Issued By:**

RFI Question:

Receiver's Reply:

Reply Date:

References:

Spec Section Codes:

Attachments:

- Type:

Note: This reply is not an authorization to proceed with work involving additional cost, time or both. If any reply requires a change to the Contract Documents, a Change Order, Construction Change Directive or a Minor Change in the work must be executed in accordance with the Contract Documents.

East Roswell Library
Subcontractor Pre-Bid Meeting - Bid Groups A,B
Sign-In Sheet

Print Name	Company Name	Phone No.	Email Address	BP 2.1	BP 3.1	BP 4.1	BP 5.1	BP 7.1	BP 8.2	BP 9.1	BP 23.1	BP 26.1
1. Teresa Estrada	TEM Construction (Concrete), LLC	678-860-3352	temconcrete@bellsouth.net									
2. Jason Wadsworth	Badger Daylighting Corp.	7-843-7873	jwadsworth@badger-corp.com									
3. Rob Pennebaker	John F Pennebaker Co.	7-231-5776	robpennebaker@johnpennebaker.com									
4. SAM KENNEDY	BLOUNT CONSTRUCTION	(7) 541-7333	sam.kennedy@blountconstruction.com									
5. SCOTT REAVES	AIR CONDITIONING SPECIALIST	7707868253	sreaves@airconspec.com									
6. Donald Stewart, III	Stewart Bros., Inc. (Asphalt Paving Sub)	770-447-5810	donald@stewartbrosinc.com									
7. Bill Maxson	RSG	404-823-3677	bmaxson@rsgroof.com									
8. Nate Haley	RAI	866724 7833	NATE.HALEY@RAI-USA.COM									
9. MICHAEL ROSS	AMERICAN WINDOW & DOOR	770.965.4183	MICHAEL.ROSS@AMERICANWINDOWANDDOOR.COM									
10. Randy Moreland	American Window and Door	770-965-4183	randy.moreland@americanwindowanddoor.com									
11. John Weaver	Keith Lawson Co.	850-251-5861	johnw@keithlawson.com									
12. John May	RAI Industrial Fabricators LLC	866 724 7833	John.May@RAI-USA.com									
13. Roy Zeh	RAI Industrial Fabricators	866 724 7833	roy.zeh@rai-usa.com									
14. Jim Kinnaman	Paradise Fabrication + Coating	770-974-4033	JimK@PFCMetal.com									
15. Larry Hanes	Universal Construction	404-244-8888	LHanes9309@AOL.com									

East Roswell Library
Subcontractor Pre-Bid Meeting - Bid Groups A,B
Sign-In Sheet

Print Name	Company Name	Phone No.	Email Address	BP 2.1	BP 3.1	BP 4.1	BP 5.1	BP 7.1	BP 8.2	BP 9.1	BP 23.1	BP 26.1
16. Imo Okwu	Quantum-Mac Int'l. Inc	770-819-8581/404-925-0428	imookwu@bellsouth.net									
17. Amari Hanes	universal construction	404-304-0760	athenes12@aol.com									
18. Brian K Jones	Fulton County											
19. Linda Walton	Fulton County Purchasing											
20. JEFF LINEBERRY	GAINESVILLE MECH	(770) 532-9130	jeff.lineberry@gainesvillemechanical.com									
21. Alice Davis	Energy Efficient Products Independent Contractor	678 235-5929	GTG316@gmail.com									Supplier
22. ROBERT PARKER	IEC SYSTEMS	770-851-1385	robert@iecsystems									
23. WAYNE DEVEZIN	wdevezin@zenitheng.com											
24. Wayne Devezin	Zenith Engineering	(404) 849-5542	wdevezin@zenitheng.com									
25. Napoleon Sears	Hawk Construction	678-201-6487	NS@hawkconstructionga.com									
26.												
27.												
28.												
29. Rebecca Bailey	Ajax Building Corporation	770-952-7422	rebecca@ajaxbuilding.com									
30. Ed Hill	" " "	" " "	ehill@ajaxbuilding.com									

East Roswell Library

Atlanta Fulton Public Library System

KHAFRA Project Number 11ATL06

ADDENDUM NUMBER ONE

April 16, 2013

The Construction Documents for this project are hereby amended or clarified as set out below. This Addendum forms a part of the Contract Documents. Bidders must acknowledge receipt of this Addendum and the inclusion of the provisions set out, in the space provided on the proposal form.

GENERAL:

1. None

SUBSTITUTIONS:

1. None

SPECIFICATIONS:

1. <u>SPECIFICATION SECTION 323223 – MODULAR CONCRETE RETAINING WALL:</u> Add Section 1.3 PERFROMACE REQUIREMENTS to read as follows:

   1.3 PERFORMANCE REQUIREMENTS

   Delegated Design: Design modular concrete retaining wall, including comprehensive engineering analysis by a qualified professional engineer, using performance requirements and design criteria indicated in the Subsurface Exploration and Geotechnical Engineering Evaluation.

   According to the geotechnical evaluation, additional services shall be secured to establish the design recommendations for the retaining wall on the southwest side of the facility.

DRAWINGS:

1. The following sheets are issued herewith:
   a. C-500 Utility: delete the sheet and replace with the attached sheet. The fire line between the fire meter assembly and the building has been upsized from a 6-inch line to an 8-inch line.
   b. FP0-0 - Fire Protection Legend, Schedule and Details: delete the sheet and replace with the attached sheet. Detail 4 – Added a 6" tag to the outgoing line on the Double Check Valve Assemblies Detail, DCVA, and changed the incoming fire line size from 6" to 8" on the same detail.

ADDENDUM NUMBER ONE
April 16, 2013

c. FP1-0 - Basement Floor Plan - Fire Protection: delete the sheet and replace with the attached sheet. Plan - Changed the note pointing to the DCVA to read as follows: "Refer to Section 2 This Sheet."

ATTACHMENTS:

C-500 Utility
FP0-0 - Fire Protection Legend, Schedule and Details
FP1-0 - Basement Floor Plan - Fire Protection

QUESTIONS & ANSWERS:

1. None.

END OF ADDENDUM ONE

LAST SAVE: Apr/15/2013 1:25 PM
FILE:P:\ED PROJECTS\0412-0010 East Roswell Library - Khafra\Design Information_Engineering\Drawings\Civil Drawings\C4D\0412-0010 C.dwg PLOT DATE:Apr/15/2013 1:32 PM PLOTTED BY: ROBERT STACHLER

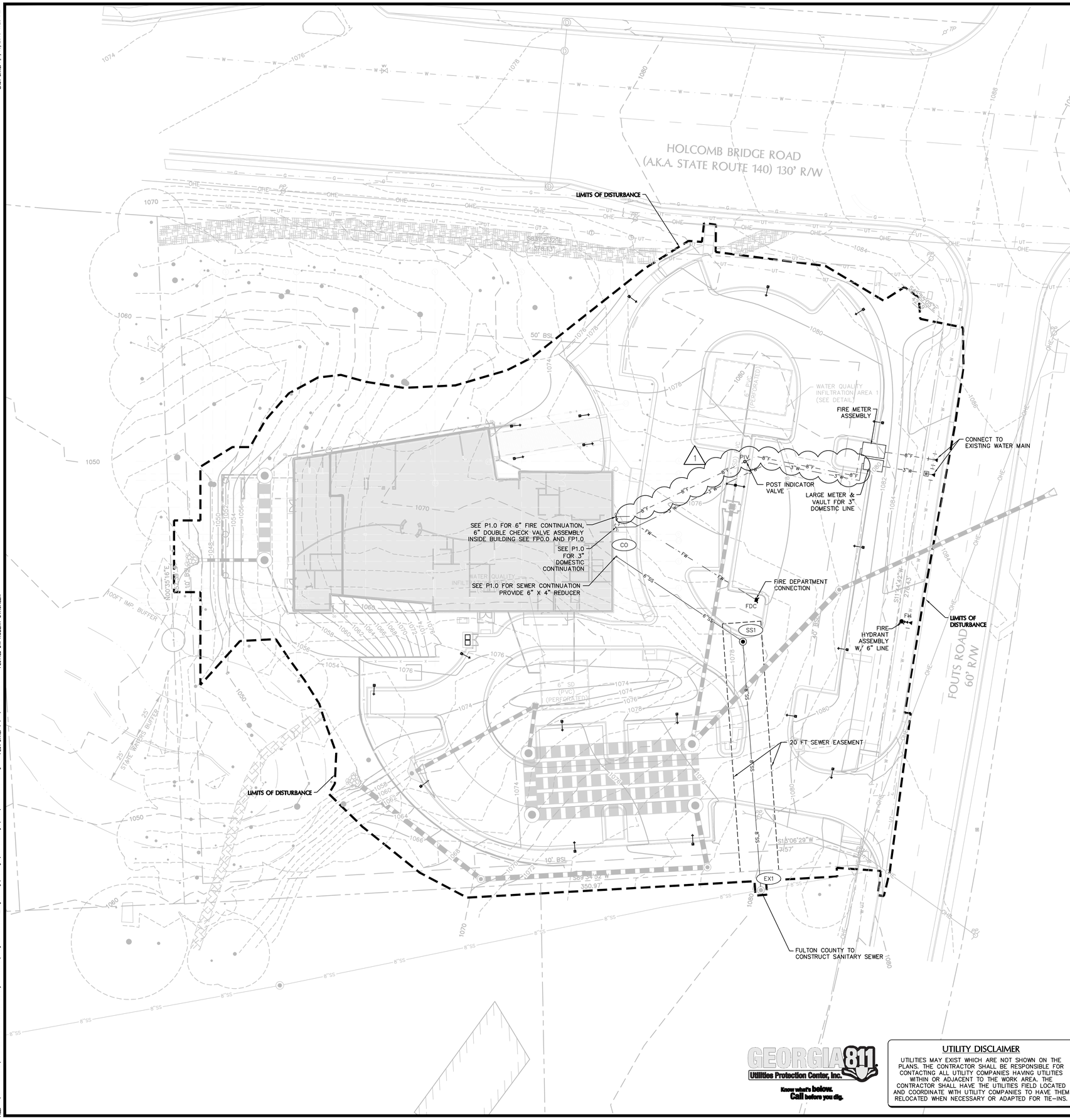

HYDRANT FLOW TEST

900 Holcomb Bridge Rd. (see Site Plan)
Flow Test Location

8 inch
Main Size

Static	Residual	Pitot	Available @ 20 PSI Res.		
100 psi	85 psi	65 psi	3321 gpm	Time:	1:00 Pm
				Date:	5/6/2012
Static	Residual	Pitot	Available @ 20 PSI Res.		
				Time:	
				Date:	

COMPUTATION
100 - 20 = 80
100 - 85 = 15
65 psi = 1350 gpm
1350 x 80/15 = 1066/4.32 = 2.46 1350 x 2.46 = 3321

Technician: Jason Depas and Carl Durham

FULTON COUNTY

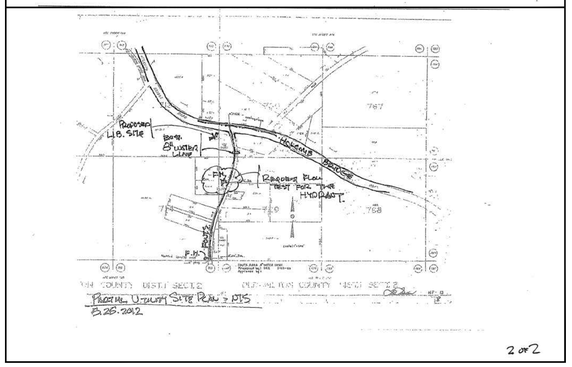

NO CERTIFICATE OF OCCUPANCY FOR THE EAST ROSWELL LIBRARY WILL BE ISSUED WITHOUT A PROPER SEWER CONNECTION TO A FUNCTIONING SEWER LINE

N

GRAPHIC SCALE
20 0 20 40
(IN FEET)
1 inch = 20 ft.

GEORGIA 811
Utilities Protection Center, Inc.
Know what's below. Call before you dig.

UTILITY DISCLAIMER

UTILITIES MAY EXIST WHICH ARE NOT SHOWN ON THE PLANS. THE CONTRACTOR SHALL BE RESPONSIBLE FOR CONTACTING ALL UTILITY COMPANIES HAVING UTILITIES WITHIN OR ADJACENT TO THE WORK AREA. THE CONTRACTOR SHALL HAVE THE UTILITIES FIELD LOCATED AND COORDINATE WITH UTILITY COMPANIES TO HAVE THEM RELOCATED WHEN NECESSARY OR ADAPTED FOR TIE-INS.

KHAFRA ENGINEERING CONSULTANTS, INC.
230 PEACHTREE STREET, SUITE 200
ATLANTA, GEORGIA 30303
PHONE (404) 525-2120
FAX (404) 522-7941

ARCHITECT OF RECORD

HBM ARCHITECTS
Peter Bolek, AIA
1382 West Ninth Street,
Suite 300
Cleveland, Ohio 44113
216.241.1100
www.HBMarchitects.com

DESIGN ARCHITECT

SEAL

CERT.# 56533
EXPIRES: NOVEMBER 12, 2014

No.	DATE	REVISION	APV'D
1	4-16-13	ADDENDUM 1	APV'D

REUSE OF DOCUMENTS
THIS DOCUMENT WITH THE IDEAS AND DESIGNS INCORPORATED HEREIN ARE AN INSTRUMENT OF KHAFRA AND MUST NOT TO BE USED IN WHOLE OR IN PART FOR ANY OTHER PROJECT WITHOUT THE WRITTEN AUTHORIZATION OF KHAFRA

PROJECT
atlanta-fulton public library system
East Roswell Branch Library
2301 Holcomb Bridge Road
Roswell, Georgia 30076

DATE	3-27-2013
DRWN. BY	PVC
DSGN. BY	JG
CHKD. BY	JEL
APVD. BY	JMS
SCALE	1"=20'

CIVIL

100% DESIGN DEVELOPMENT

UTILITY PLAN

PROJECT No. 11ATL06
DRAWING No. C500
SHEET No. 8 OF 114

100% CONSTRUCTION DOCUMENTS

FIRE PROTECTION SYMBOLS AND ABBREVIATIONS

PIPE CAP OR BLIND FLANGE

FIRE LINE

FIRE DEPARTMENT CONNECTION

FLOW SWITCH

SPRINKLER LEGEND

(UPRIGHT HEAD)

(SEMI-RECESSED PENDENT)

(CONCEALED HEAD)

(EXTEND COVERAGE SIDEWALL HEAD)

FIRE PROTECTION MISCELLANEOUS EQUIPMENT SCHEDULE

TYPE MARK	DESCRIPTION	MANUFACTURER	MODEL	INSTALLATION	CONNECTION	LOCATION
DVCA	DOUBLE CHECK VALVE ASSEMBLY	FEBCO	870V	VERTICAL	6"	MECHANICAL ROOM A (005)

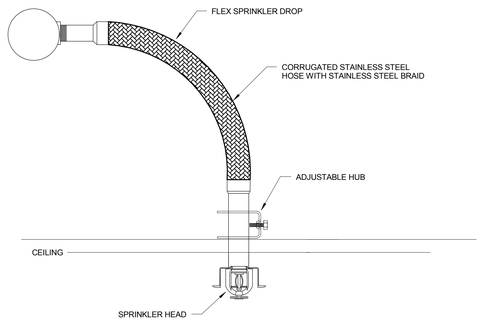

1 FLEXIBLE CONNECTION FOR SPRINKLER HEAD

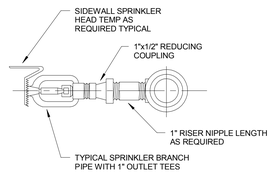

2 SIDEWALL SPRINKER HEAD

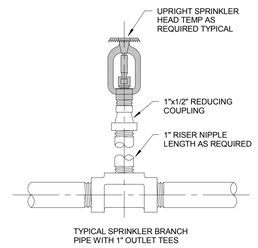

3 UPRIGHT SPRINKLER HEAD

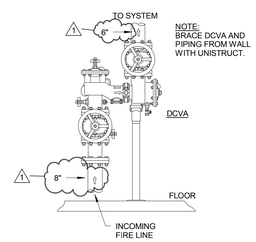

4 DOUBLE CHECK VALVE ASSEMBLIES DETAIL

KAI DESIGN & BUILD
211 North Broadway
Suite 1900
Saint Louis, MO 63102
T. 314.241.8188
F. 314.241.0125
www.kai-db.com

FULTON COUNTY

KHAFRA
230 PEACHTREE STREET, SUITE 200
ATLANTA, GEORGIA 30303
PHONE (404) 525-2120
FAX (404) 522-7941

ARCHITECT OF RECORD

HBM ARCHITECTS
Parker Bonek, AIA
1382 West Ninth Street,
Suite 300
Cleveland, Ohio 44113
216.241.1100
www.HBMarchitects.com

DESIGN ARCHITECT

SEAL

No.	Description	Date
1	ADDENDUM 1	04/16/2013

REUSE OF DOCUMENTS

THIS DOCUMENT, WITH THE IDEAS AND DESIGNS INCORPORATED HEREIN, ARE AN INSTRUMENT OF KHAFRA AND MUST NOT TO BE USED IN WHOLE OR IN PART FOR ANY OTHER PROJECT WITHOUT THE WRITTEN AUTHORIZATION OF KHAFRA

PROJECT

atlanta-fulton public library system

EAST ROSWELL BRANCH
2301 Holcomb Bridge Road
Roswell, Georgia 30076

DATE	MARCH 27, 2013
BRWN. BY	CJL
DSGN. BY	CJL
CHKD BY	SVS
APVD BY	PK
SCALE	1/8" = 1'-0"

SHEET TITLE

FIRE PROTECTION LEGEND, SCHEDULE AND DETAILS

PROJECT No. Project Number

DRAWING No.

FP0.0

SHEET No. 99 OF 122

100% CONSTRUCTION DOCUMENTS

4/15/2013 11:36:24 AM

D:\Projects\10-120110\10-12015_cleizone.rvt

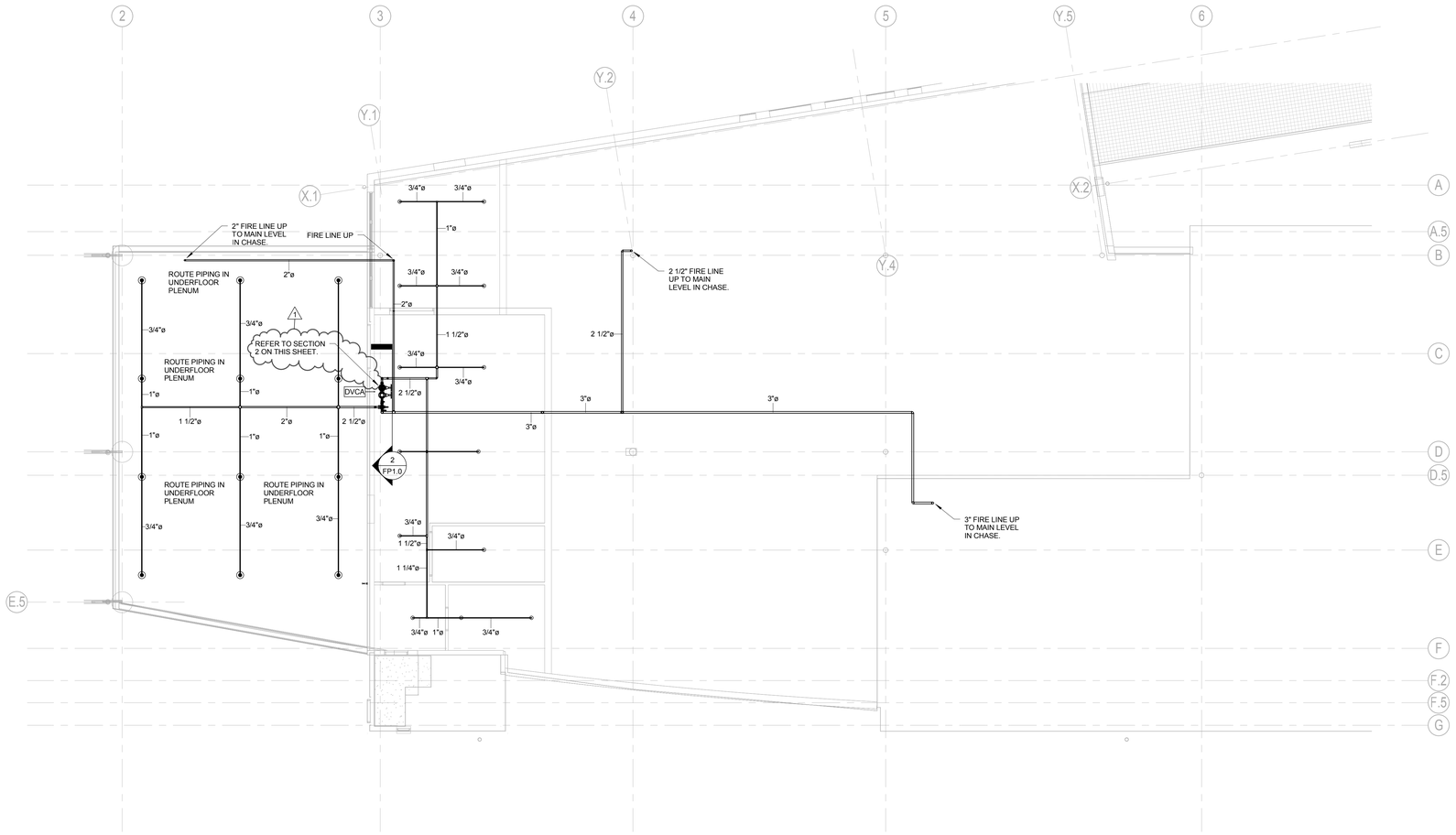

1 BASEMENT FLOOR PLAN - FIRE PROTECTION
1/8" = 1'-0"

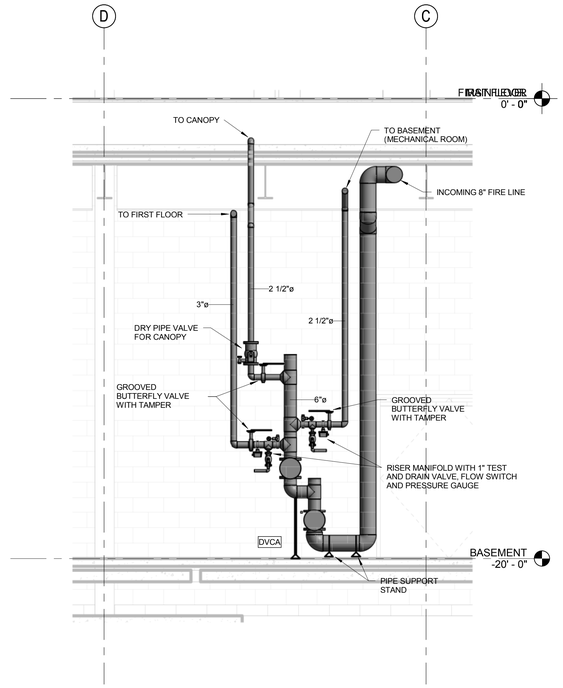

2 SECTION FOR FIRE PROTECTION
3/8" = 1'-0"

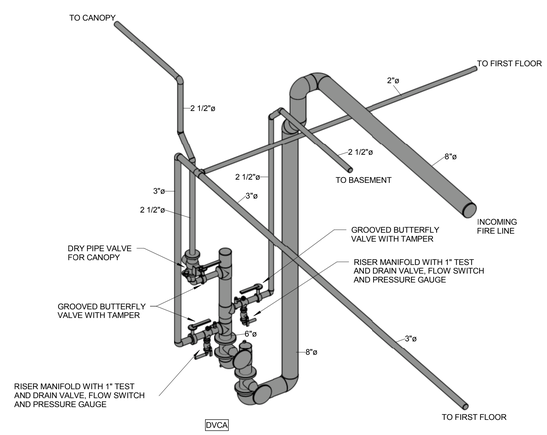

3 FIRE PROTECTION RISER

GENERAL NOTES:

1. FOR FIRE PROTECTION SYMBOLS, ABBREVIATIONS, SCHEDULES AND DETAILS. SEE SHEET FP0.0.

2. CONTRACTOR SHALL PROVIDE A HYDRAULICALLY CALCULATED FIRE PROTECTION SYSTEM AS INDICATED IN SPECIFICATIONS.'

3. SPRINKLER SYSTEM SHALL CONFORM TO N.F.P.A. 13 AS INDICATED.

4. CONTRACTOR SHALL COORDINATE ALL WORK WITH OTHER TRADES BEFORE AND DURING INSTALLATION OF SPRINKLER SYSTEM FOR POSSIBILITY OF INTERFERENCE OF LIGHTS, DUCTWORK AND STRUCTURAL BEAMS, ETC.

5. REFER TO SPECIFICATIONS FOR FIRE SPRINKLER DESIGN NARRATIVE AND DENSITY REQUIREMENTS.

6. ALL PENETRATIONS IN ACCESS FLOOR SHALL BE SEALED (AIR TIGHT).

FULTON COUNTY

KHAFRA
230 PEACHTREE STREET, SUITE 200
ATLANTA, GEORGIA 30303
PHONE (404) 525-2120
FAX (404) 522-7941

ARCHITECT OF RECORD

HBM ARCHITECTS
Parker Bosek, AIA
1382 West Ninth Street,
Suite 300
Cleveland, Ohio 44113
216.241.1100
www.HBMarchitects.com

DESIGN ARCHITECT

SEAL

No.	Description	Date
1	ADDENDUM 1	04/16/2013

REUSE OF DOCUMENTS

THIS DOCUMENT WITH THE IDEAS AND DESIGNS INCORPORATED HEREIN ARE AN INSTRUMENT OF KHAFRA AND MUST NOT TO BE USED IN WHOLE OR IN PART FOR ANY OTHER PROJECT WITHOUT THE WRITTEN AUTHORIZATION OF KHAFRA

PROJECT

afpl atlanta-fulton public library system

EAST ROSWELL BRANCH
2301 Holcomb Bridge Road
Roswell, Georgia 30076

DATE	MARCH 27, 2013
BRWN. BY	CJL
DSGN. BY	CJL
CHKD BY	SVS
APVD BY	PK
SCALE	As indicated

SHEET TITLE

BASEMENT FLOOR PLAN - FIRE PROTECTION

PROJECT No. Project Number

DRAWING No.

FP1.0

SHEET No. 100 OF 122

100% CONSTRUCTION DOCUMENTS

KAI DESIGN & BUILD
211 North Broadway
Suite 1900
Saint Louis, MO 63102
T. 314.241.8188
F. 314.241.0125
www.kai-db.com

4/15/2013 11:29:28 AM

D:\Projects\10-12015\10-12015_cbecrone.rvt