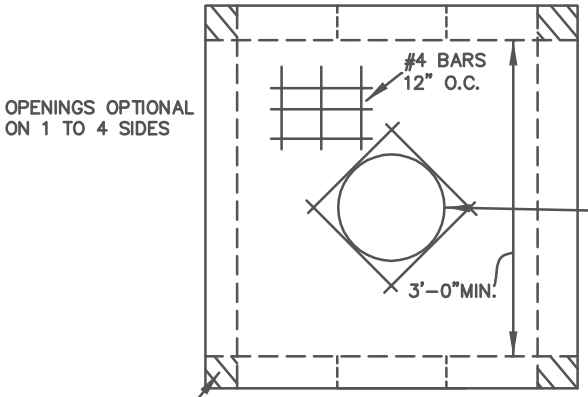

TOP VIEW

STANDARD CATCH BASIN CASTING
SEE STANDARD NO. 112 FOR DETAILS

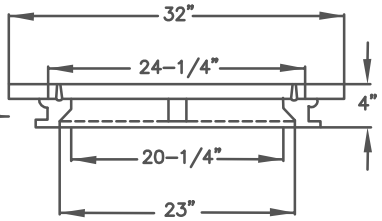

BRICK PILLARS

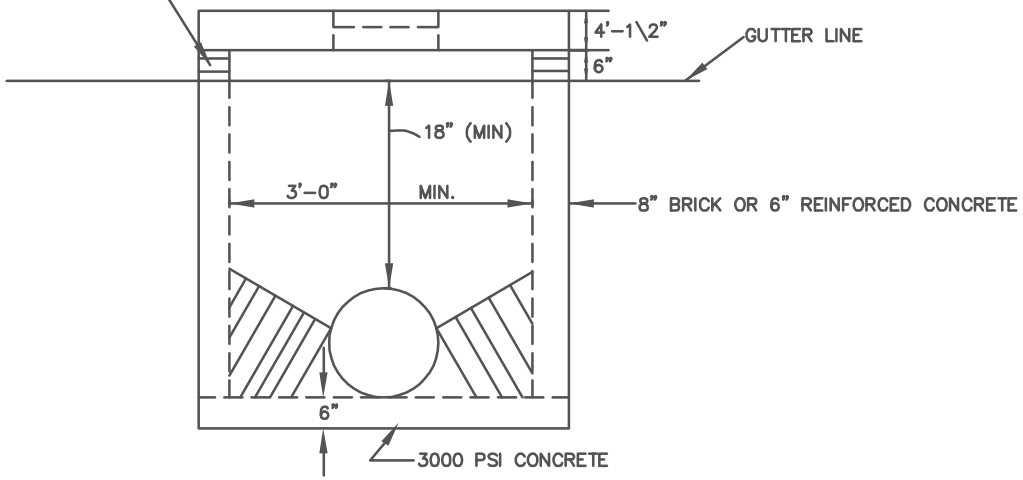

FRONT VIEW

NOTE:
BRICK OR MASONRY INVERT REQUIRED (ROWLOCK), OR CONCRETE

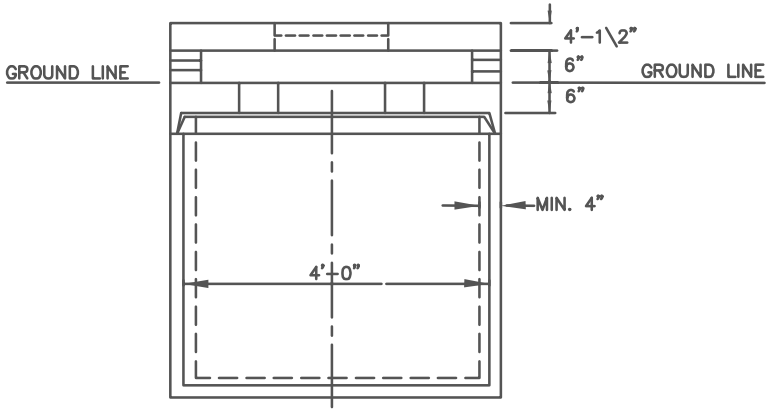

ALT. FRONT VIEW
FOR ROUND PRECAST BOX

NOTE:
FOR DETAILS ON ROUND TO SQUARE ADAPTER,
SEE FILE NO. 507

FULTON COUNTY STANDARD DETAIL 512
DROP INLETS
(WEIR TYPE)

DATE	REVISIONS	DATE	REVISIONS
8/08	RC		

DGS/DRN/CHKD: CMS
APPROVED: REW
DATE: 12-2-05

FULTON COUNTY

FULTON COUNTY PUBLIC WORKS
141 PRYOR ST. ATLANTA, GA. 30303
404-612-7400 FAX: 404-224-0498

DRAWING NO.
512