INDEX

DWG NO.	DESCRIPTION
700	INDEX AND GENERAL NOTES
701	GREASE/SOLIDS/OIL INTERCEPTOR 4 TANKS IN SERIES
702	SINGLE TANKS
703	TRASH COMPACTOR AND DUMPSTER PAD DETAILS
704	SANITARY SEWER EASEMENT
705	STRUCTURAL PLATE PIPE CULVERT
706	DETAIL OF OPTIONAL STEEL PIER
707	SERVICE CONNECTION ON NEW SEWERS
708	SERVICE CONNECTION ON EXISTING SEWERS
709	SERVICE CONNECTION CLEANOUT
710	WATERSTOP COLLAR
711	SEWER LATERAL INSTALLATION DETAILS FOR CURBED STREETS

GENERAL NOTES

FULTON COUNTY STANDARD DETAIL
INDEX AND GENERAL NOTES

DATE	REVISIONS	DATE	REVISIONS

DGS/DRN/CHKD: CMS
APPROVED: REW
DATE: 12-02-05

FULTON COUNTY

FULTON COUNTY PUBLIC WORKS
141 PRYOR ST. ATLANTA, GA. 30303
404-730-7400 FAX: 404-730-6325

DRAWING NO. 700

INSPECTIONS:
1. ALL PRETREATMENT SYSTEMS ARE REQUIRED TO BE INSPECTED PRIOR TO BACKFILLING CONTACT PUBLIC WORKS COMMERCIAL TREATMENT.
2. FINAL INSPECTIONS ARE REQUIRED ON ALL PRETREATMENT SYSTEMS PRIOR TO USE.

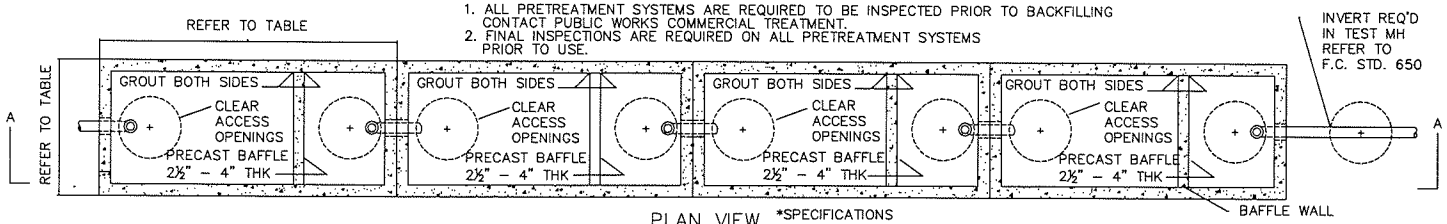

PLAN VIEW
N.T.S.

*SPECIFICATIONS
CONCRETE MINIMUM STRENGTH 4000 PSI AT 28 DAYS. STEEL REINFORCEMENT ASTM–A–515.75, GRADE 50, ONE INCH COVER MINIMUM DESIGN LOADING AASHO HS20–44. CONSTRUCTION JOINT SEALED WITH ONE INCH DIA. BUTYL RUBBER OR EQUIVALENT.

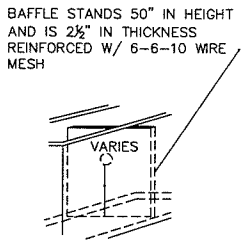

BAFFLE WALL
N.T.S.

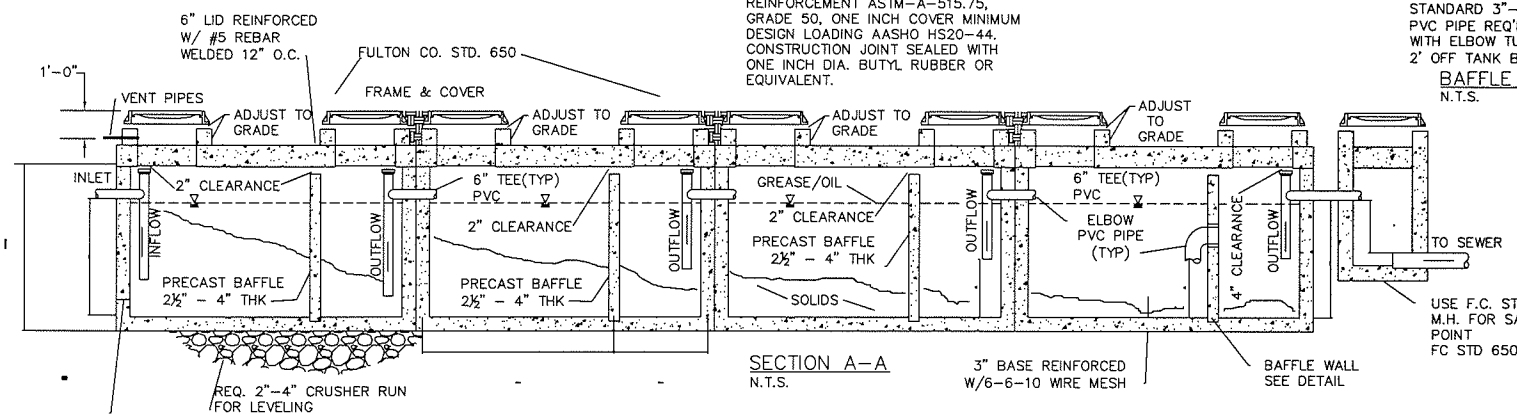

SECTION A–A
N.T.S.

GALLON CAPACITY	*OUTSIDE DIMENSIONS (L) LENGTH	(W) WIDTH	(H) HEIGHT	INLET TEE HGT.	OUTLET TEE HGT.
				*VARIES BASED ON TANK SIZE	
3000	15'–7"	9'–7"	8'–6.5"	5'–2"	5'–0"
1500	11'–0"	6'–0"	4'–7"	3'–10"	4'–0"
1000	8'–6"	5'–3"	4'–6"	3'–10"	4'–0"

*DIMENSIONS OF PREFAB CONCRETE TANKS MAY VARY BASED ON MANUFACTURER, HOWEVER THE GALLON CAPACITY MUST BE EQUIVALENT TO THE TANK SIZE SPECIFIED FOR INSTALLATION.

NOTES:
1. ANY ALTERNATIVE PRETREATMENT SYSTEMS SHALL BE APPROVED BY WATER AND POLLUTION CONTROL SECTION PRIOR TO INSTALLATION.
2. USE CONCRETE PREFAB TANKS.
3. NO INTERCEPTOR SHALL BE LESS THAN 1,000 GALLONS WHERE SEATING IS LESS THAN 50 AND NO SINGLE CHAMBER INTERCEPTOR SHALL BE GREATER THAN 3000 GALLONS.
4. FOR RESTAURANTS USE MINIMUM ONE 1515 GALLON TANK PER 100 SEATS.
5. MULTI–CHAMBERED TANKS SHALL BE CONNECTED BY 8"ABS OR PVC PIPE; MIN. 6" PVC ACCEPTED.
6. SAMPLING MANHOLE SHALL BE INSTALLED UNLESS EXCLUDED BY W&PC.
7. ALL MANHOLES MUST ADJUST TO GRADE.
8. DISTANCE BETWEEN MULTIPLE TANKS NO GREATER THAN 12".
9. TEST MANHOLE NO GREATER THAN 6 FEET AFTER PRETREATMENT SYSTEM.
10. MULTIPLE TANKS MUST BE PLACED IN TANDEM (SINGLE LINE).

FULTON COUNTY STANDARD DETAIL 701
GREASE/SOLIDS/OIL INTERCEPTOR
4 TANKS IN SERIES

DATE	REVISIONS	DATE	REVISIONS

DGS/DRN/CHKD: JM
APPROVED: REW
DATE: 12–2–05

FULTON COUNTY

FULTON COUNTY PUBLIC WORKS
141 PRYOR ST. ATLANTA, GA. 30303
404–730–7400 FAX: 404–224–0498

DRAWING NO. 701

GALLON CAPACITY	*OUTSIDE DIMENSIONS			INLET TEE HGT.	OUTLET TEE HGT.
	LENGTH	WIDTH	HEIGHT	*VARIES BASED ON TANK SIZE	
3000	15'–7"	9'–7"	8'–6.5"	5'–2"	5'–0"
1500	11'–0"	6'–0"	4'–7"	3'–10"	4'–0"
1000	8'–6"	5'–3"	4'–6"	3'–10"	4'–0"
750	7'–0"	4'–8"	4'–6"	3'–10"	4'–0"

*DIMENSIONS OF PREFAB CONCRETE TANKS MAY VARY BASED ON MANUFACTURER, HOWEVER THE GALLON CAPACITY MUST BE EQUIVALENT TO THE TANK SIZE SPECIFIED FOR INSTALLATION.

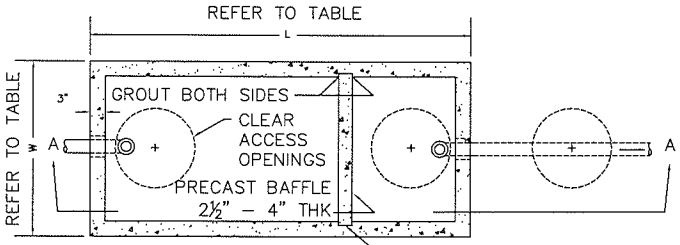

PLAN VIEW
N.T.S.

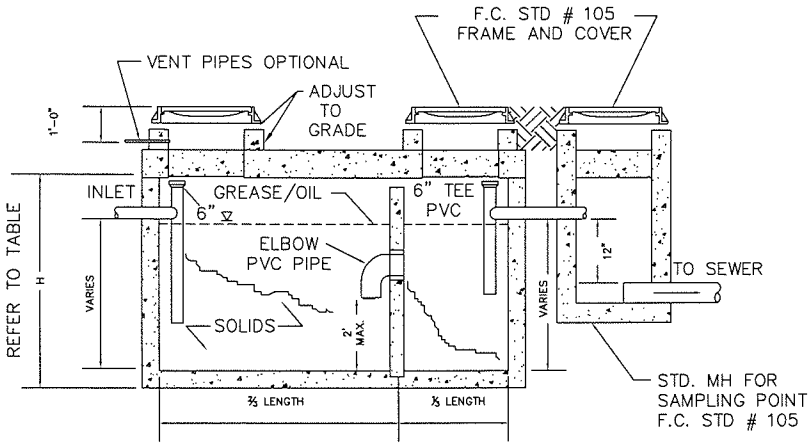

SECTION A–A
N.T.S.

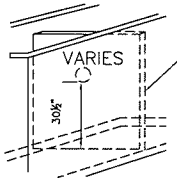

BAFFLE STANDS 50" IN HEIGHT AND IS 2½" IN THICKNESS REINFORCED W/ 6–6–10 WIRE MESH

PIPE DIAMETER MAY VARY STANDARD 3"–5"
PVC PIPE REQ'D ON WALL WITH ELBOW TURNED DOWN MAX. 2' OFF TANK BOTTOM

* BAFFLE WALL OPTIONAL ON SINGLE TANK INSTALLATIONS.

BAFFLE WALL*
N.T.S.

FULTON COUNTY STANDARD DETAIL 702
SINGLE TANK

DATE	REVISIONS	DATE	REVISIONS

DGS/DRN/CHKD: JM
APPROVED: REW
DATE: 12–2–05

FULTON COUNTY

FULTON COUNTY PUBLIC WORKS
141 PRYOR ST. ATLANTA, GA. 30303
404–730–7400 FAX: 404–224–0498

DRAWING NO. 702

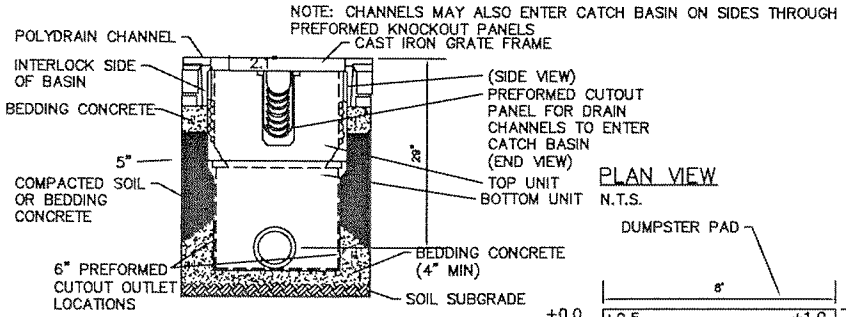

SIDE VIEW
N.T.S.

PLAN VIEW
N.T.S.

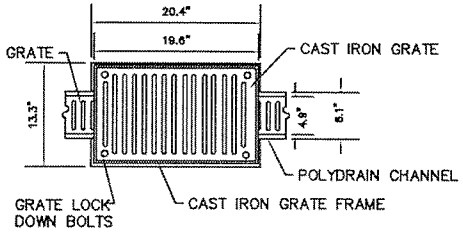

500 SERIES CATCH BASIN INTERCONNECTED POLYDRAIN CHANNELS OR APPROVED EQUAL

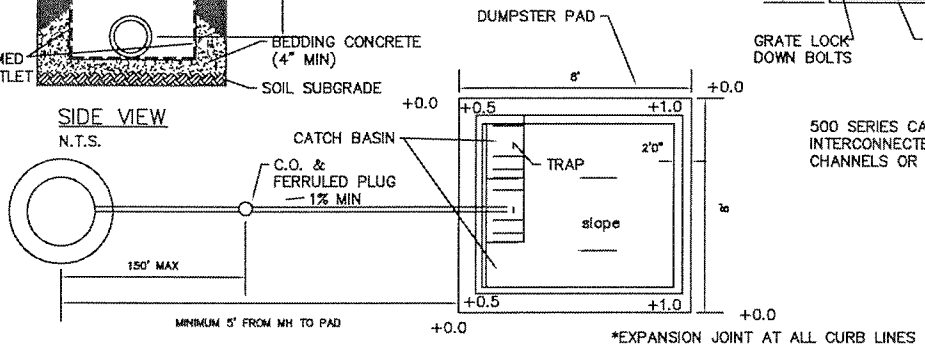

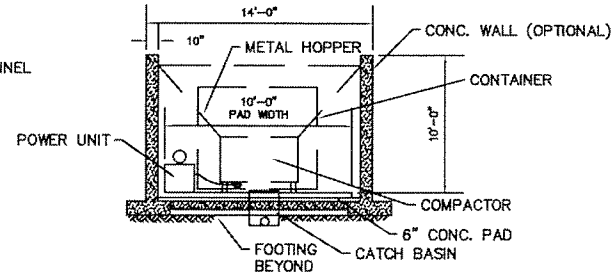

REAR ELEVATION
N.T.S.

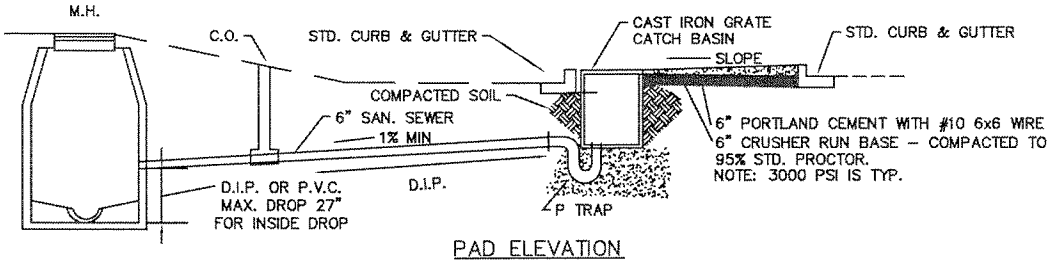

PAD ELEVATION
N.T.S.

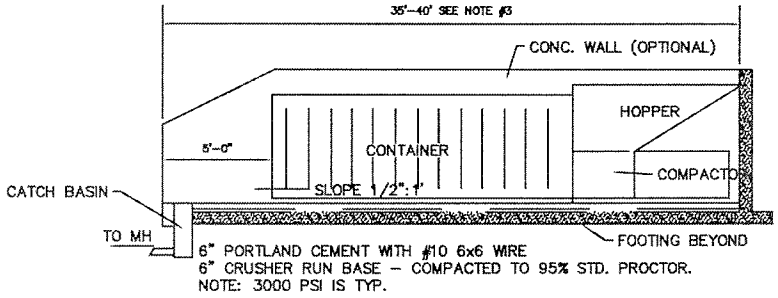

SIDE ELEVATION
N.T.S.
TRASH COMPACTOR

NOTES:
1. WATER BIBB REQUIRED WITHIN 50' OF PAD FOR CLEANSING.
2. APPROVAL FROM HEALTH DEPT. REQUIRED.
3. COMPACTOR PAD TO BE 10'-0" WIDE AND A LENGTH OF 5'-0" GREATER THAN THE COMBINED LENGTH OF THE COMPACTOR AND CONTAINER.
4. RUBBER BOOT REQUIRED FOR P.V.C. PIPE. (MANHOLE CONNECTOR) WATER BIBB TO HAVE BACK FLOW PREVENTER.
5. DO NOT CONNECT DRAIN TO GREASE TRAP. SURFACE WATER RUNOFF MUST BE SLOPED AWAY FROM PAD.
6. DO NOT ALLOW STORM WATER RUNOFF ON PAD.
7. 4 FOOT CHAIN LINK FENCE WITH 3-4 FOOT ACCESS GATE IS REQUIRED AROUND ALL COMPACTORS AND HOPPERS.

FULTON COUNTY STANDARD DETAIL 703 TRASH COMPACTOR AND DUMPSTER PAD DETAILS		DATE	REVISIONS	DATE	REVISIONS	DGS/DRN/CHKD: JM APPROVED: REW DATE: 12-2-05	FULTON COUNTY	FULTON COUNTY PUBLIC WORKS 141 PRYOR ST. ATLANTA, GA. 30303 404-730-7400 FAX: 404-224-0498	DRAWING NO. 703

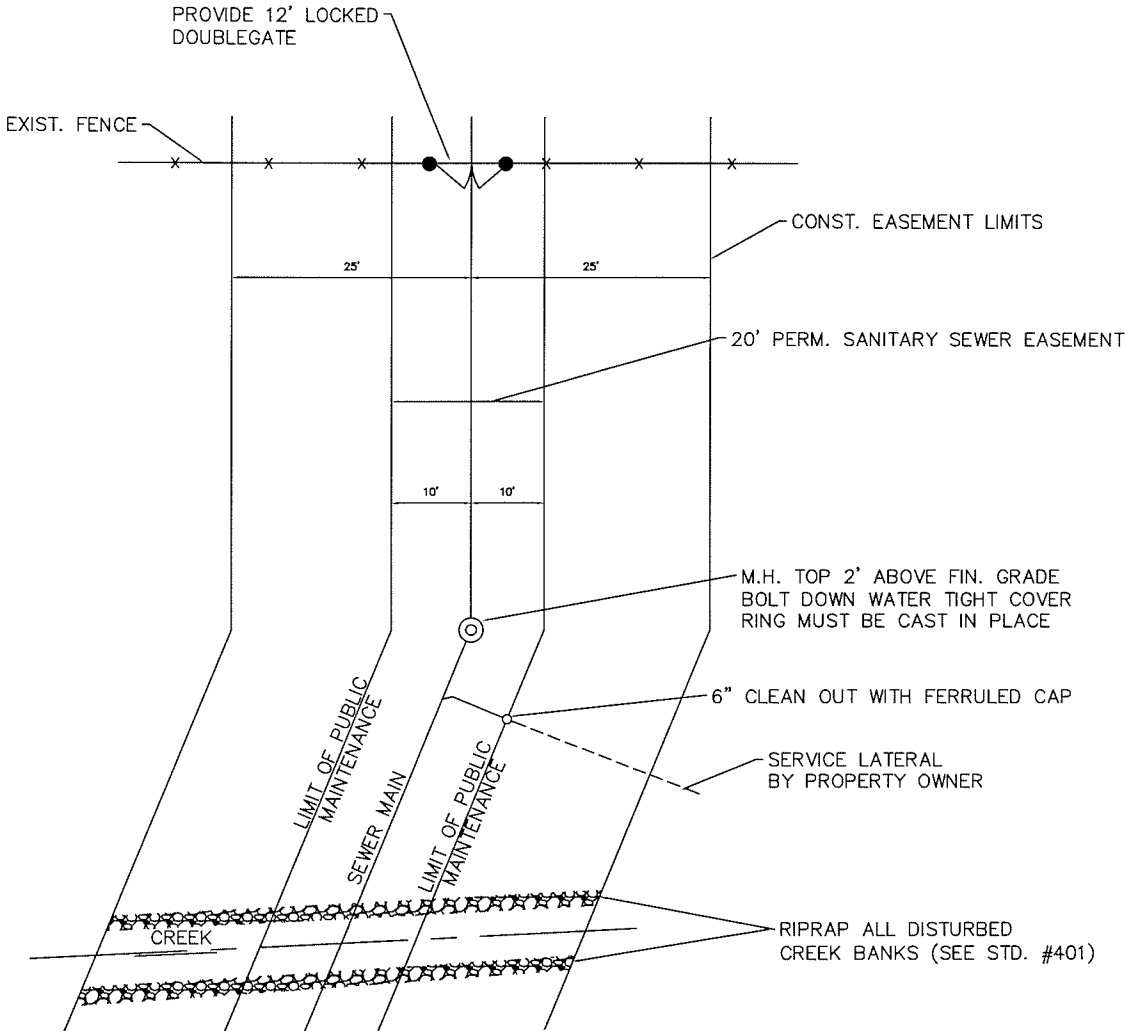

NOTES:

1. NO POOLS STRUCTURES DECKS, BRIDGES OR PATIOS MAY BE PLACED IN THE PERM. EASEMENT.
2. CLEAR ALL TREES IN PERM EASEMENT AND MAINTAIN CLEARANCE.
3. RESEED, FERTILIZE AND MULCH ALL DISTURBED AREAS PER EROSION CONTROL STANDARDS, MAINTAIN 1% SLOPE DRAINAGE.
4. NO PERMANENT STRUCTURES INSIDE PERMANENT EASEMENT.
5. NO BURY PITS ALLOWED IN EASEMENT.

FULTON COUNTY STANDARD DETAIL 704
SANITARY SEWER EASEMENT

DATE	REVISIONS	DATE	REVISIONS

DGS/DRN/CHKD: JM
APPROVED: REW
DATE: 12-2-05

FULTON COUNTY

FULTON COUNTY PUBLIC WORKS
141 PRYOR ST. ATLANTA, GA. 30303
404-730-7400 FAX: 404-224-0498

DRAWING NO.
704

MINIMUM HEIGHT OF COVER

UNPAVED AND FLEXIBLE PAVEMENTS
FOR 72"DIA. TO 120" DIA.–1/3 DIA.
FOR 120" DIA. AND OVER – NOT LESS THAN 24".

RIGID PAVEMENTS
FOR 72" DIA. TO 120" DIA.– 1/7 DIA. BUT NOT LESS THAN 12"
FOR 120" DIA. AND OVER– NOT LESS THAN 18".

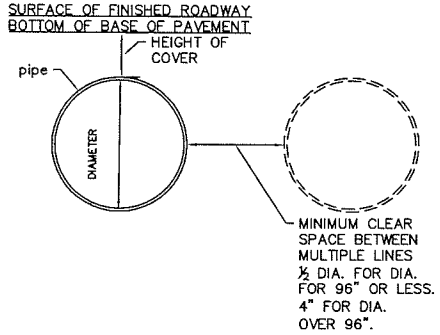

GENERAL NOTES:
1. SPECIFICATIONS – GEORGIA STANDARD
2. DESIGN DATA – H–20 LIVE LOAD
3. GAGES SHOWN ARE MINIMAL STRUCTURAL REQUIREMENTS FOR USE WITH ADEQUATE BACKFILL.
4. FOR END FINISH, SHAPE OR CONDITION OTHER THAN SHOWN, SEE SPECIAL DESIGN.

NOTES:
1. GAGES SHOWN IN ABOVE TABLE ARE FOR STRUCTUAL PLATE PIPE ASSEMBLED WITH A 4 BOLT PER FOOT OF LONGITUDINAL SEAM AND VERTICALLY ELONGATED 5% BY SHOP FORMING, EXCEPT AS NOTED IN NO. 2.
2. BEYOND HEIGHTS OF COVER FOR 4 BOLTS AND TO HEIGHTS OF COVER SHOWN FOR 6 BOLTS, IN COLUMN AT RIGHT, NO.1 GAGE STRUCTUAL PLATE PIPE WITH 6 BOLTS PER FOOT OF LONGITUDINAL SEAM AND VERTICALLY ELONGATED 3% BY SHOP FORMING SHALL BE USED.
3. ONLY R.C.P ALLOWED UNDER COUNTY ROADS.

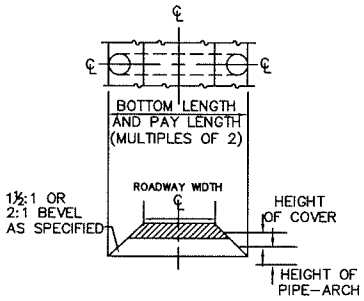

AREA SQ.FT	DIA. INCHES	HEIGHT OF COVER (FEET) 1–5	6 –10	11–15	16–20	21–25	26 –30	31– 35	36 –40	41–45	46–50	51–55	56–60	61–70	71–80	81–90	91–100	1 GAGE 6 BOLTS
		MINIMUM THICKNESS U.S. STD. GAGE – 4 BOLTS																
28	72							12	12	10	10	8	8	7	5	3	1	165'
33	78						12	12	10	10	8	8	8	5	3	1		150'
38	84					12	12	12	10	10	8	8	7	5	3	1		140'
44	90	12	12	12	12	12	12	10	10	8	8	7	5	3	1			130'
50	96	12	12	12	12	12	10	10	10	8	7	7	5	3	1			125'
57	102	12	12	12	12	10	10	10	8	8	7	5	5	1				115'
64	108	12	12	12	10	10	10	10	8	7	5	5	3	1				110'
71	114	10	12	10	10	10	10	8	8	7	5	5	3	1				105'
79	120	10	12	10	10	10	10	8	7	5	5	3	1					100'
87	126	10	12	10	10	10	10	8	7	5	3	3	1					95'
95	132	10	10	10	10	10	8	8	7	5	3	1	1					90'
104	138	10	10	10	10	10	8	7	5	3	3	1						85'
113	144	10	10	10	10	8	8	7	5	3	1	1						80'
123	150	10	10	10	8	8	8	7	5	3	1							80'
133	156	10	10	10	8	8	8	5	3	1	1							75'
145	162	10	10	10	8	8	7	5	3	1								70'
154	168	10	10	10	8	8	7	5	3	1								70'
165	174	8	10	8	8	8	7	5	3	1								65'
177	180	8	10	8	8	8	5	3	1									65'

FOR STRUCTURES IN THIS ZONE, SEE NOTE NO. 2 ABOVE

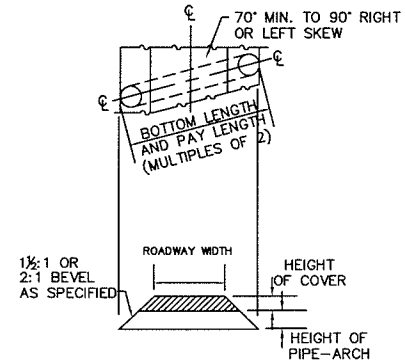

FULTON COUNTY STANDARD DETAIL 705
STANDARD
STRUCTURAL PLATE
PIPE CULVERT

DATE	REVISIONS	DATE	REVISIONS

DGS/DRN/CHKD: JM
APPROVED: REW
DATE: 12–2–05

FULTON COUNTY

FULTON COUNTY PUBLIC WORKS
141 PRYOR ST. ATLANTA, GA. 30303
404–730–7400 FAX: 404–224–0498

DRAWING NO. 705

DETAIL OF CLAMP
N.T.S.

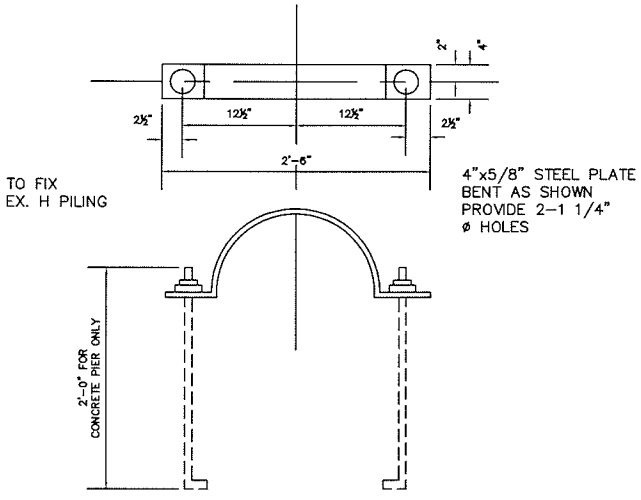

2-1"ø STAINLESS STEEL ANCHOR BOLTS
WITH A.S.A. HEX
NUT AND WASHERS

NOTE:
ENGINEER TO SUBMIT DESIGN.

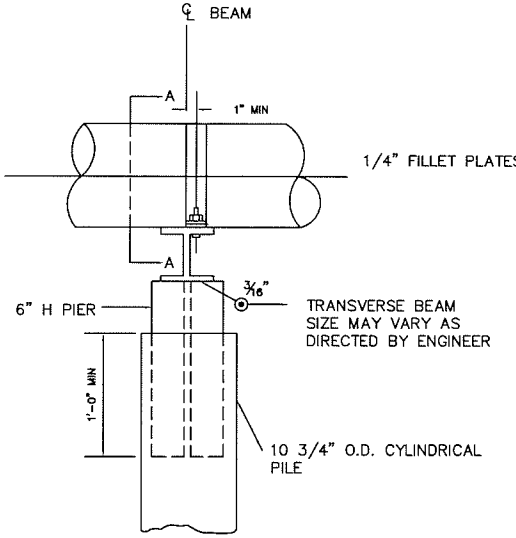

SECTION A-A
N.T.S.

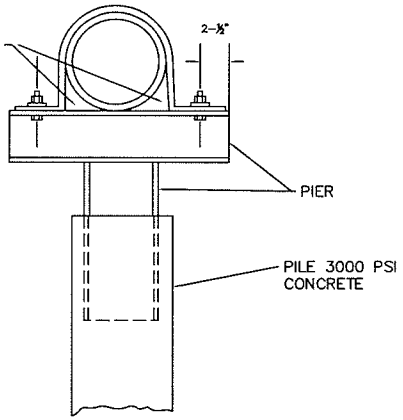

NOTE:
PILE TO BE DRIVEN TO REFUSAL OR 10 TON
BEARING MIN., THEN FILLED WITH 3000 P.S.I. CONCRETE.
TRANSVERSE BEAM TO BE WELDED TO PIER BEFORE SETTING CONCRETE.

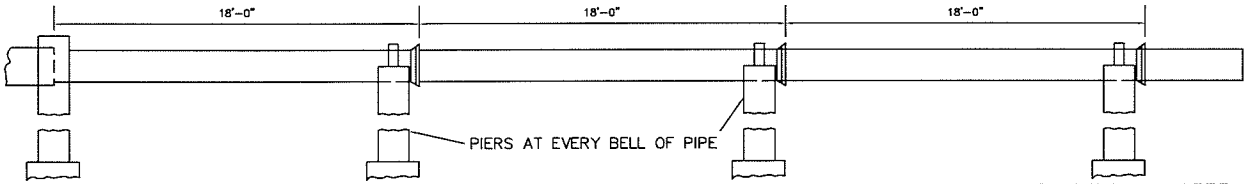

PIER LOCATION TO BE DETERMINED BY ENGINEER OR FULTON COUNTY INSPECTOR.

DETAIL OF OPTIONAL STEEL PIER
N.T.S.

FULTON COUNTY STANDARD DETAIL 706 DETAIL OF OPTIONAL STEEL PIER		DATE	REVISIONS	DATE	REVISIONS	DGS/DRN/CHKD: JM APPROVED: REW DATE: 12-2-05	FULTON COUNTY	FULTON COUNTY PUBLIC WORKS 141 PRYOR ST. ATLANTA, GA. 30303 404-730-7400 FAX: 404-224-0498	DRAWING NO. 706

NOTES:
1. CONNECTION TO NEW SEWER SHALL BE WITH TEE OR WYE.
2. NO TEES OR WYES ON SEWERS LARGER THAN 18"ø.
3. WHERE SERVICE LINE CROSSES STATE HWY R/W, PIPE AND FITTINGS SHALL BE MECHANICAL JOINT D.I. PIPE AS SPECIFIED UNDER ITEM NO. 7 D.I. PIPE AND TRENCH SHALL BE BACKFILLED WITH CRUSED STONE.

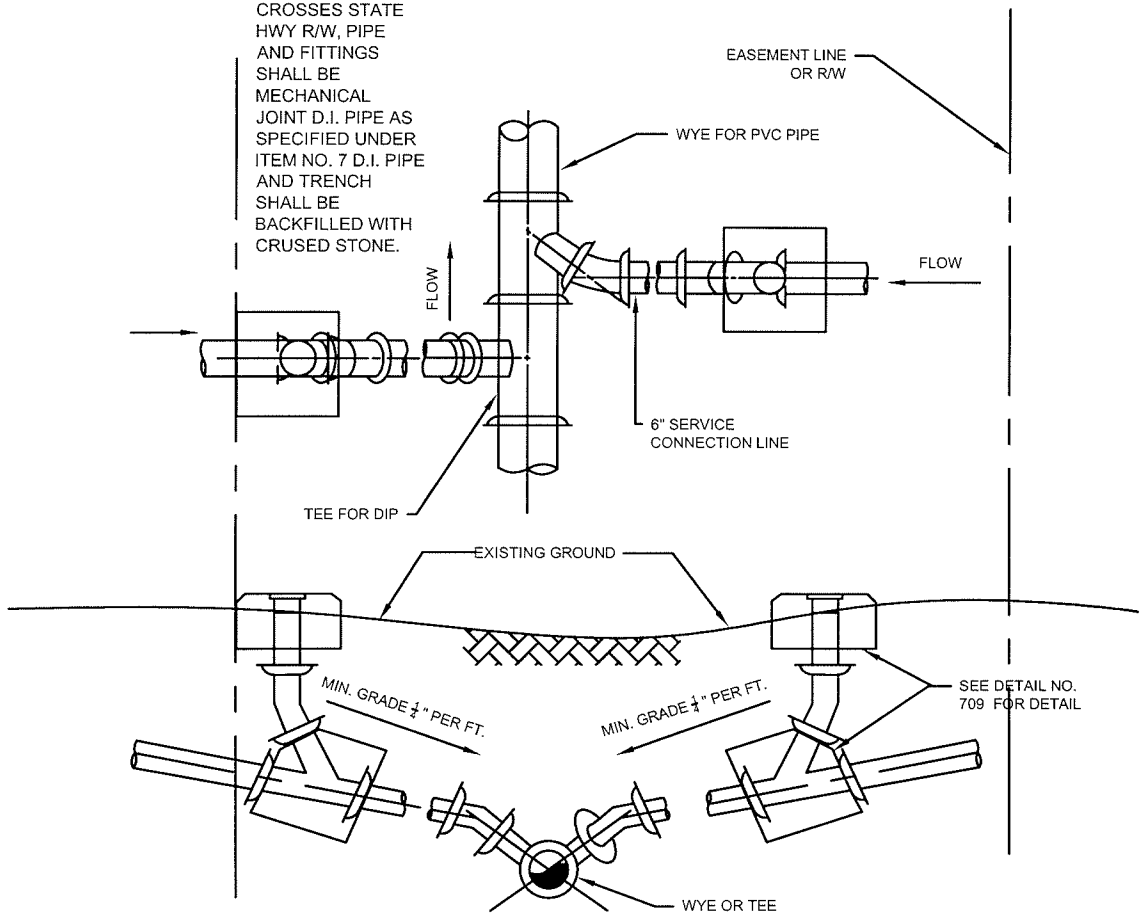

FULTON COUNTY STANDARD DETAIL 707 SERVICE CONNECTION ON NEW SEWERS		DATE	REVISIONS	DATE	REVISIONS	DGS/DRN/CHKD: JM APPROVED: REW DATE: 12-2-05	FULTON COUNTY	FULTON COUNTY PUBLIC WORKS 141 PRYOR ST. ATLANTA, GA. 30303 404-730-7400 FAX: 404-224-0498	DRAWING NO. 707

NOTES:

1. HOLE IN EXISTING SEWER SHALL BE CORED.

2. CONNECT SERVICE TO SEWER WITH: -BOOT ON RCP AND VCP SEWERS -TAPPING SADDLE ON DIP SEWERS
-MANUFACTURED SADDLE ON PVC PIPE SEWERS

3. NO HAMMER TAPS

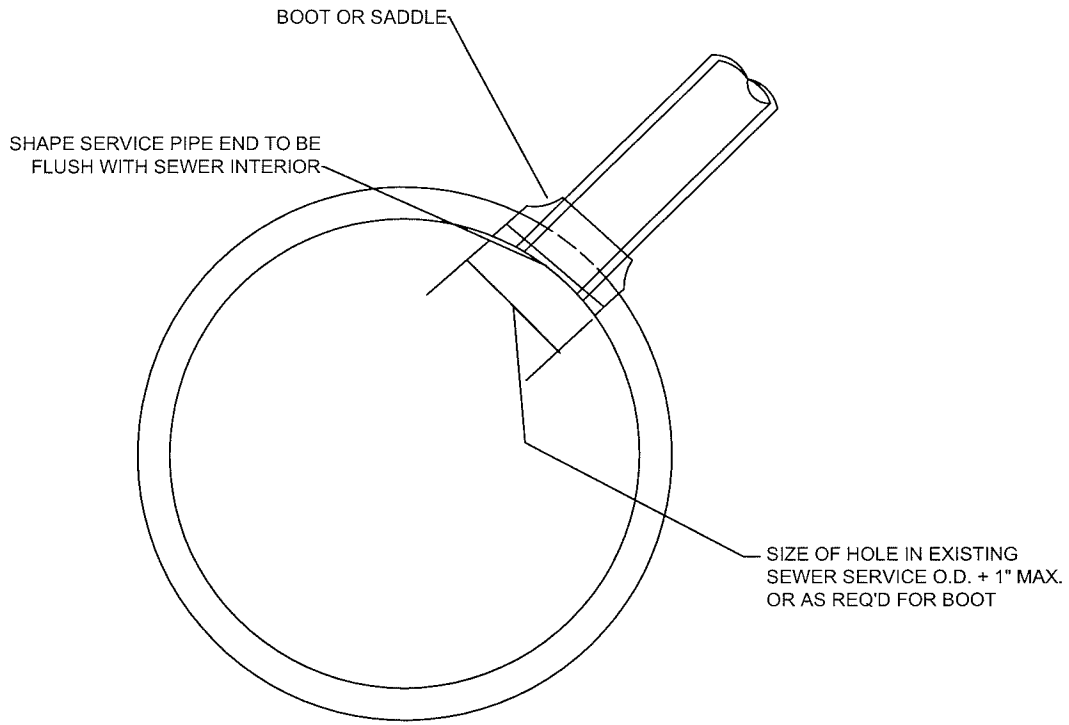

FULTON COUNTY STANDARD DETAIL 708 SERVICE CONNECTION ON EXISTING SEWERS		DATE	REVISIONS	DATE	REVISIONS	DGS/DRN/CHKD: JM APPROVED: REW DATE: 12-2-05	FULTON COUNTY	FULTON COUNTY PUBLIC WORKS 141 PRYOR ST. ATLANTA, GA. 30303 404-730-7400 FAX: 404-224-0498	DRAWING NO. 708

NOTES:
1. TOP OF SERVICE BOX SHALL BE FLUSH WITH FINAL SURFACE IN SIDEWALKS AND PAVED AREAS.

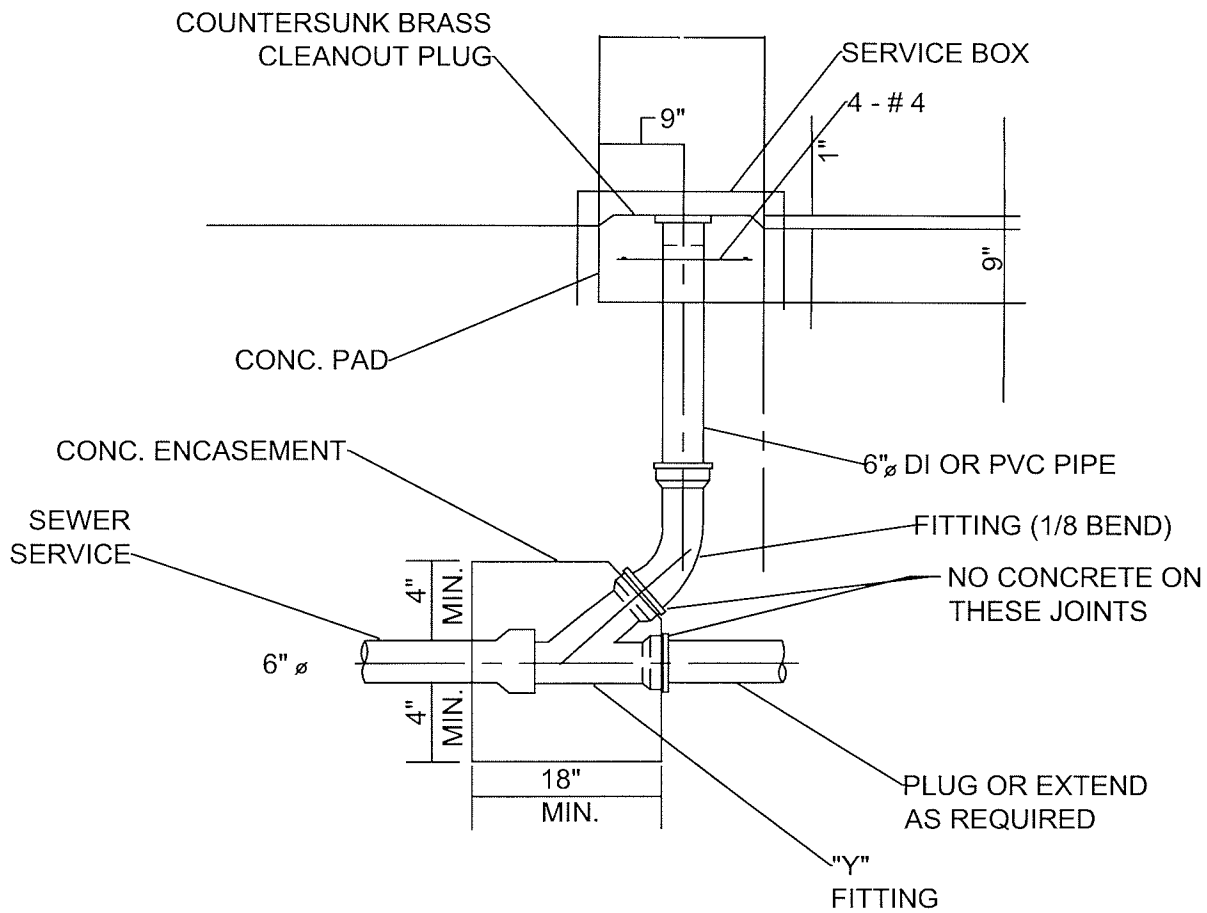

FULTON COUNTY STANDARD DETAIL 709 SERVICE CONNECTION CLEANOUT		DATE	REVISIONS	DATE	REVISIONS	DGS/DRN/CHKD: CMS APPROVED: REW DATE: 12-2-05	FULTON COUNTY	FULTON COUNTY PUBLIC WORKS 141 PRYOR ST. ATLANTA, GA. 30303 404-730-7400 FAX: 404-224-0498	DRAWING NO. 709

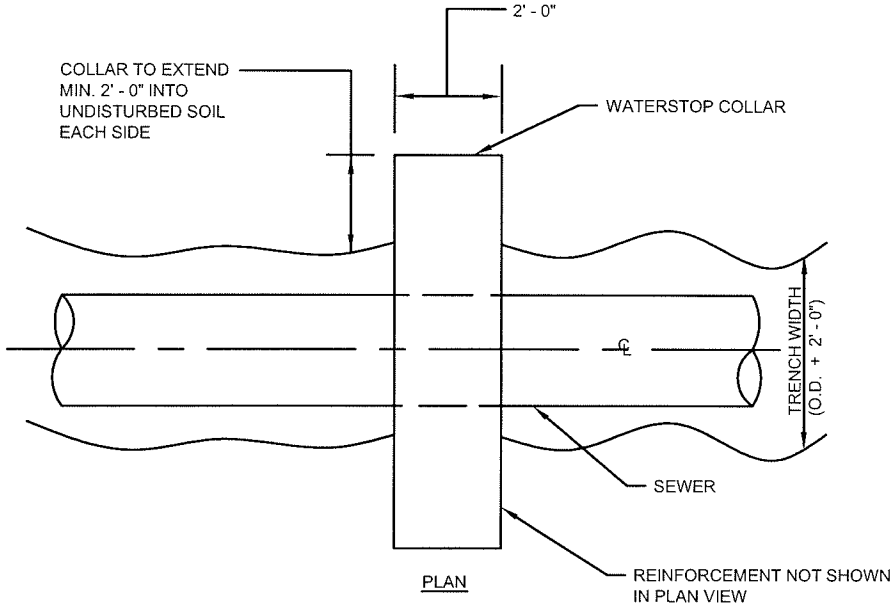

PLAN

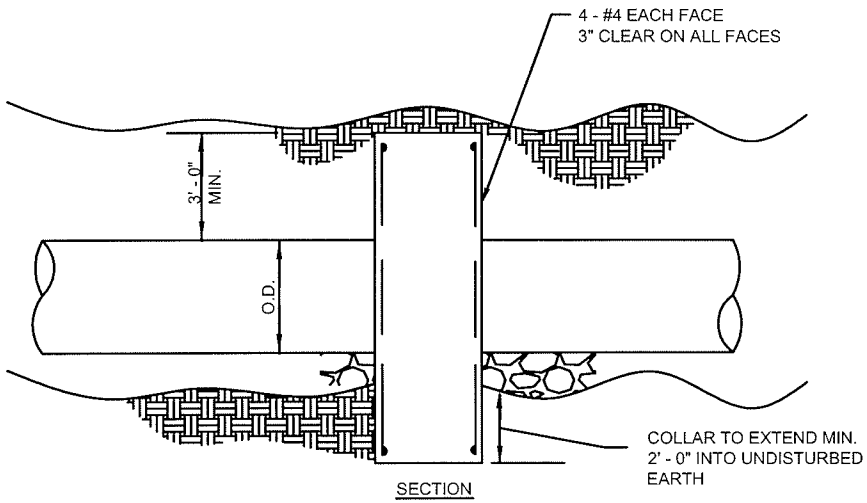

SECTION

FULTON COUNTY STANDARD DETAIL 710 WATERSTOP COLLAR		DATE	REVISIONS	DATE	REVISIONS	DGS/DRN/CHKD: JM APPROVED: REW DATE: 12-2-05	FULTON COUNTY	FULTON COUNTY PUBLIC WORKS 141 PRYOR ST. ATLANTA, GA. 30303 404-730-7400 FAX: 404-224-0498	DRAWING NO. 710

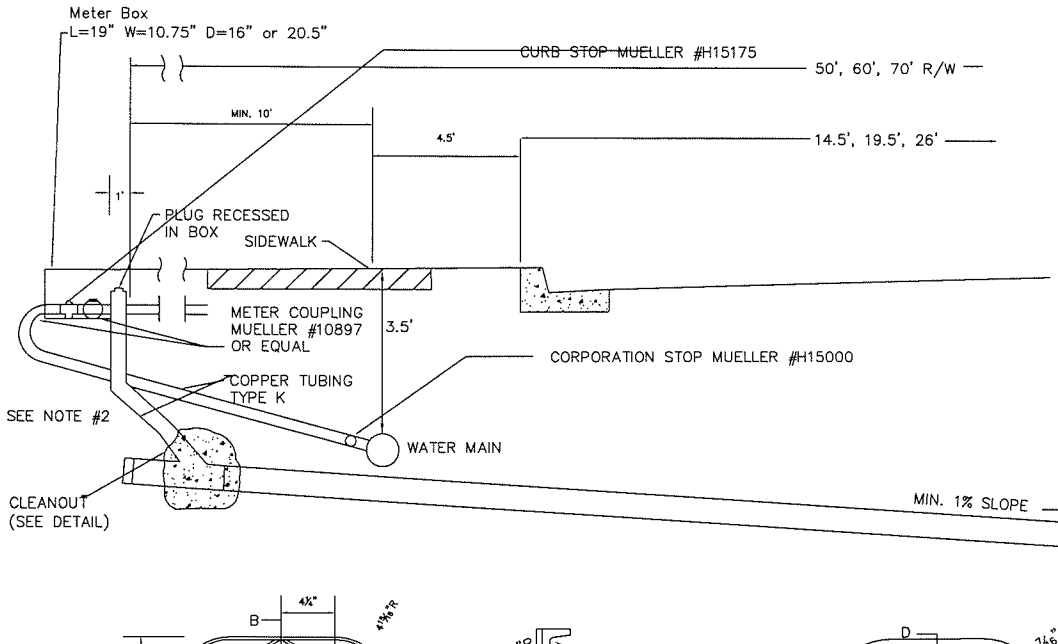

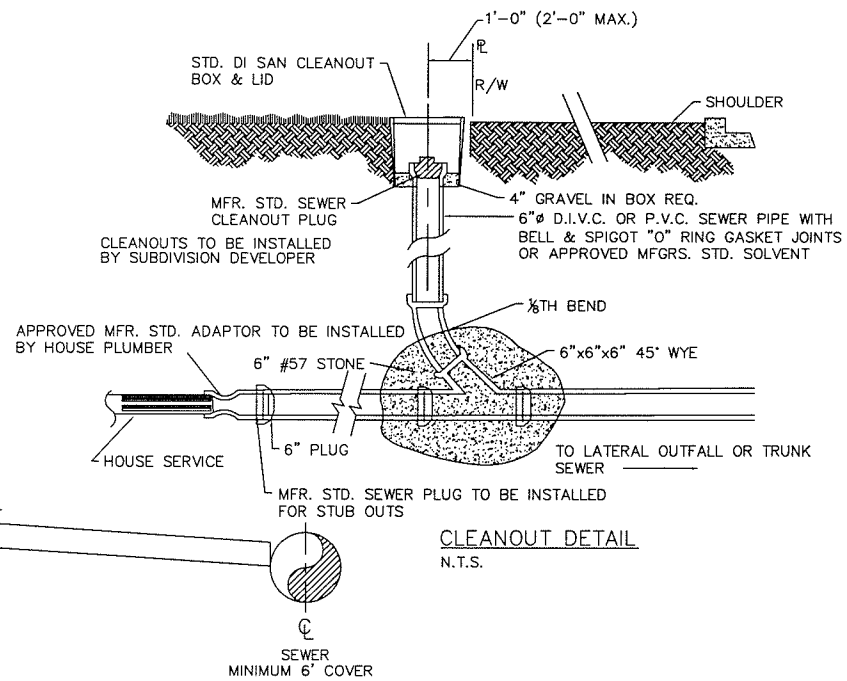

CLEANOUT DETAIL
N.T.S.

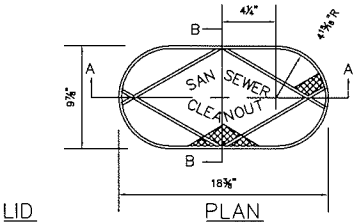

PLAN
N.T.S.

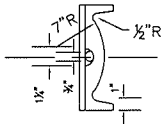

SECTION B–B
N.T.S.

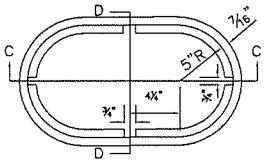

PLAN VIEW
N.T.S.

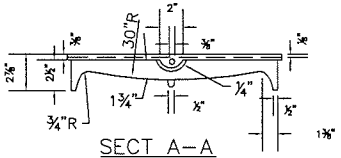

SECT A–A
N.T.S.

NOTES
1. CAST IRON SHALL CONFORM TO A.S.T.M. SPEC A48 LATEST REV. FOR CLASS 20 GREY IRON CASTINGS.
2. IF THE RISER IS GREATER THAN 6'–0" THE JOINT WILL BE ENCASED IN 6" OF 1:3.5 CONCRETE.

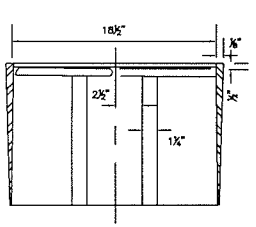

SECTION C–C
CLEANOUT BOX
N.T.S.

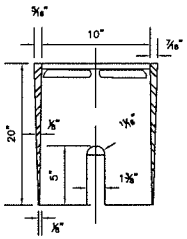

SECT D–D
N.T.S.

FULTON COUNTY STANDARD DETAIL 711 SEWER LATERAL INSTALLATION DETAILS FOR CURBED STREETS	DATE	REVISIONS	DATE	REVISIONS	DGS/DRN/CHKD: REB APPROVED: REW DATE: 12–2–05	FULTON COUNTY FULTON COUNTY PUBLIC WORKS 141 PRYOR ST. ATLANTA, GA. 30303 404–730–7400 FAX: 404–224–0498	DRAWING NO. 711